INITECH AIRCRAFT CORPORATION

Presents

The JTC-2E: Swingliner

AN INTER-THEATER TACTICAL TRANSPORT
with
AUSTERE STOL CAPABILITY

2006-2007 AIAA UNDERGRADUATE TEAM DESIGN COMPETITION

Virginia Polytechnic Institute and State University
Aerospace and Ocean Engineering Department
Blacksburg, Virginia
May 7, 2007

INITECH AIRCRAFT CORPORATION

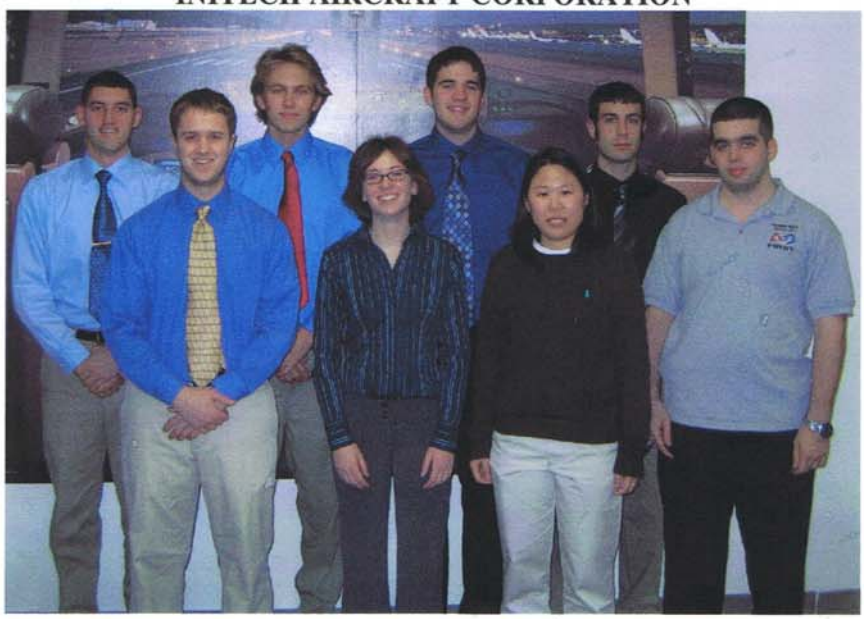

Francis Chapelle
AIAA # 280277
Team Leader

Aaron Castelle
AIAA # 281111
Weights

Marcus DeFazio
AIAA # 280987
Systems

Eric Fuchs
AIAA # 247777
Performance

Gregory Costanzo
AIAA # 249174
Configurations

Joseph Ferrante
AIAA # 274336
Stability & Control

Nancy L. Fung
AIAA # 277381
Structures

Christina DeLorenzo
AIAA # 274566
Aerodynamics

Ryan Fortier
AIAA # 226204
Propulsion

Lawrence Hale
AIAA # 276917
Crew Station Layout

William H. Mason
Faulty Advisor

Executive Summary

Initech Aircraft is proud to present the JTC-2 E Swingliner in response to the 2006-2007 AIAA undergraduate design competition. The Swingliner has been developed as a survivable transport aircraft that will allow the US Air Force to deliver the US Army's Future Deployable Armored Vehicle (FDAV) to small unimproved landing strips in forward areas. The current conflicts in the Middle East have shown that the ability to deliver fire power to our troops in forward areas is vital to their mission success and survival. Current aircraft in the Air Force's inventory are aging and they are not capable to fulfill this mission. The development of a specific aircraft that can economically perform this mission is necessary.

The traditional appearance of the Swingliner masks the sophisticated aerodynamics, structures and systems that make it a superior airframe that will supply the Air Force with many years of service. The streamlined fuselage includes drag reducing technologies to improve the cruise range and performance. The transonic cruise capability is coupled with an effective high lift system which gives the Swingliner short takeoff and landing (STOL) performance required by the mission. High tech materials and structures give the aircraft all of the strength required to survive the mission while providing a lighter airframe than previous aircraft. The Swingliner is equipped with the latest avionics, radar and defensive systems. These systems allow it to survive in the potentially hostile environments that it will encounter. These systems will also allow the Swingliner to operate in the network centric warfare environment of the future.

The JTC-2 E Swingliner provides the USAF with a reliable and survivable solution to the austere transport mission.

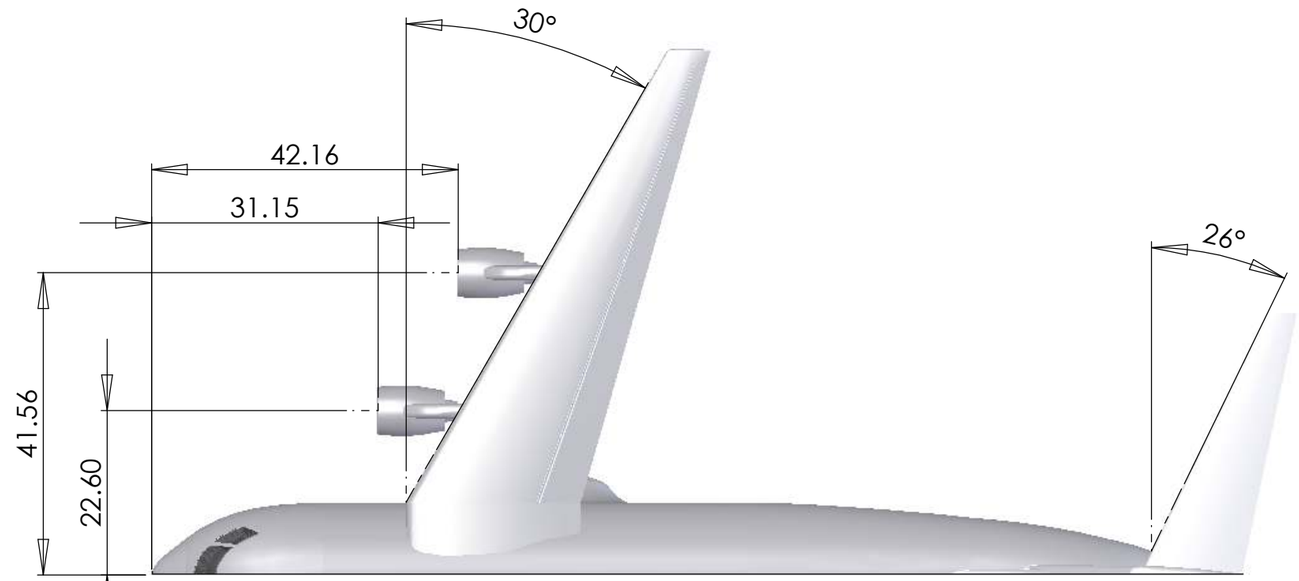

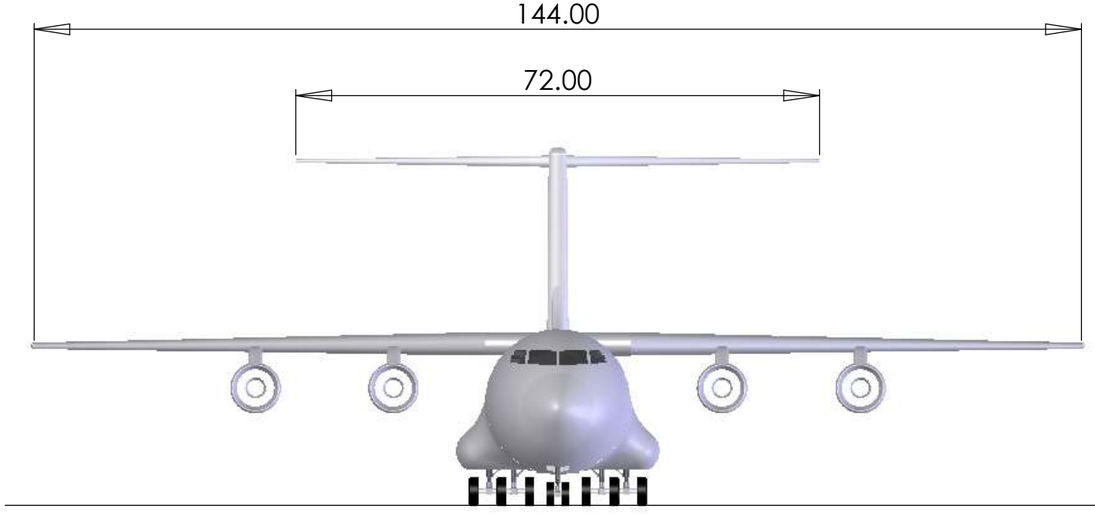

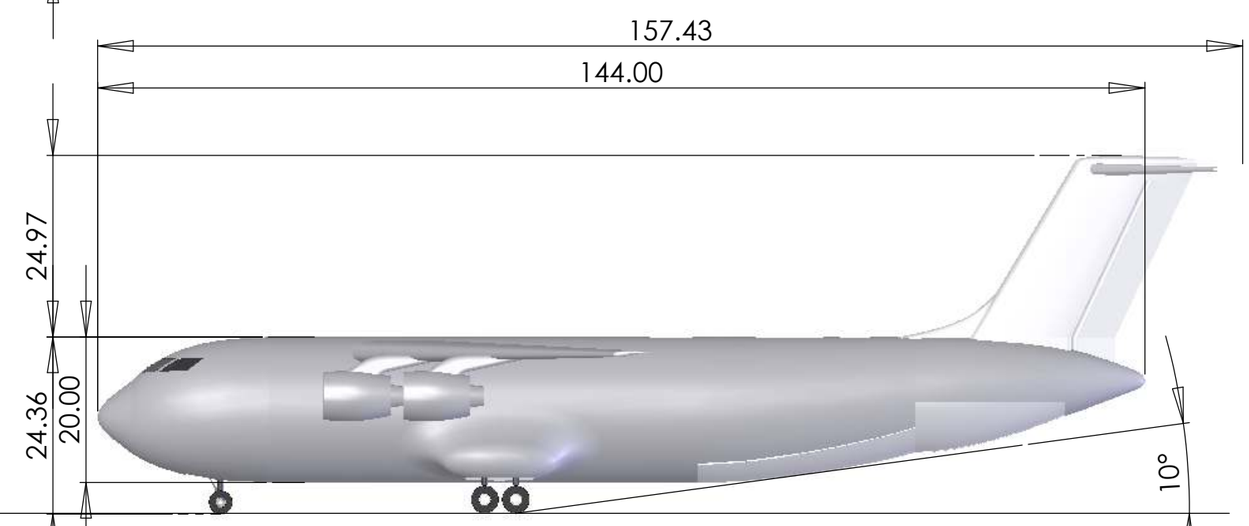

UNLESS OTHERWISE SPECIFIED:		NAME	DATE
DIMENSIONS ARE IN FEET	DRAWN	GC	5/02/07
	CHECKED		
	ENG APPR.		
	MFG APPR.		
	Q.A.		
	COMMENTS:		

INITECH AIRCRAFT CORP.

TITLE: JTC-2E Swingliner

SIZE	DWG. NO.	REV
B		

SCALE 1/250 | SHEET 1 OF 1

TABLE OF CONTENTS

LIST OF FIGURES

LIST OF TABLES

NOMENCLATURE

α	angle of attack
AR	aspect ratio
C_L	lift coefficient
C_{L_D}	design lift coefficient
C_l	local lift coefficient
C_{Lmax}	max lift coefficient
C_D	drag coefficient
C_{D0}	parasite drag coefficient
C_P	pressure coefficient
CG	center of gravity
Λ	Wing Sweep
M_{DD}	Drag Divergence Mach Number
SFC	specific fuel consumption
TOGW	takeoff gross weight
x	distance to center of gravity referenced from nose of aircraft
W	weight
L/D	lift to drag ratio
W/S	wing loading
S_{ref}	reference wing area
MAC	Mean Aerodynamic chord
e	Oswald efficiency factor
t/c	thickness ratio

LIST OF ABBREVIATIONS

AIAA	American Institute of Aeronautics and Astronautics
BFL	Balanced Field Length
CG	Center of Gravity
CIT	Combined IFF Interrogator/Transponder
FAA	Federal Aviation Administration
FADEC	Full Authority Digital Engine Control
FAR	Federal Aviation Regulation
FDAV	Future Deployable Armored Vehicle
FOD	Foreign Object Debris
LAIRCM	Large Aircraft Infrared Countermeasures
MAC	Mean Aerodynamic Chord
NCO	Network Centric Operations
RFP	Request For Proposal
STOL	Short Takeoff and Landing
TOGW	Takeoff Gross Weight

1.0 Initial Investigations and Sizing

The Swingliner is an inter-theatre cargo aircraft designed with austere STOL capabilities. The Swingliner was designed to carry a 30 ton (60,000 lb) Future Deployable Armored Vehicle (FDAV) 600 NM, takeoff in 2500 ft, land on an unimproved runway in 2500 ft or less, drop the payload, and then return without refueling, and land in 2500 ft. The aircraft is also capable of a longer ferry mission of 3200 NM with 10 tons (20,000 lbs) of payload only refueling once.

1.1 Mission Requirements

The AIAA requirements specify two missions that competitor aircraft must be able to complete to be considered.

Mission 1:

The first mission is the combat role of this aircraft and is shown in Fig. 1-1. The aircraft must operate in short fields while carrying the required mission payload of the Future Deployable Armored Vehicle (FDAV). This mission will be referred to as the primary mission throughout this report. This mission must be flown with full payload of 30 tons and in-flight refueling cannot be used.

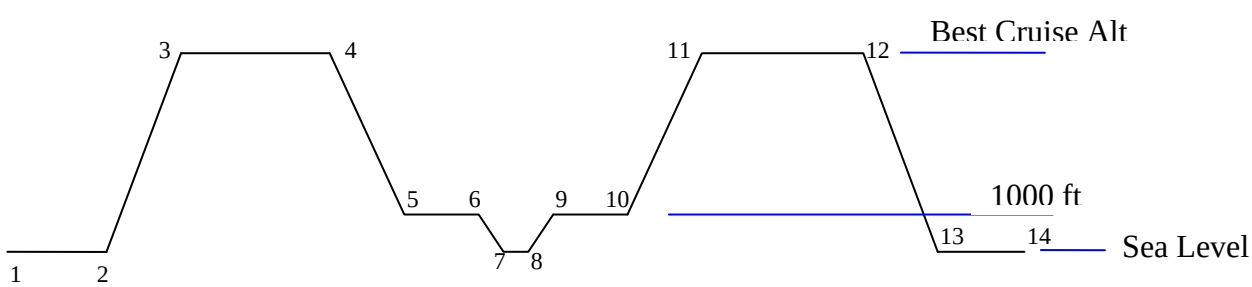

Figure 1-1. Mission Profile for Primary Mission

Table 1-1 gives a short description of each mission segment shown in Fig. 1-1.

Table 1-1. Primary Mission Profile Descriptions

Segment	Description
1 – 2	Start up / taxi / takeoff (2500 ft BFL)
2 – 3	Climb to best cruise altitude (above 30,000 ft)
3 – 4	Cruise 500 nm at Mach 0.8
4 – 5	Descend to 1000 ft
5 – 6	Cruise 100 nm at Mach 0.6
6 – 7	Descend and perform landing (3000 ft usable runway)
7 – 8	Taxi / drop payload / takeoff (2500 ft BFL)
8 – 9	Climb to 1000 ft
9 – 10	Cruise 100 nm at Mach 0.6
10 – 11	Climb to best cruise altitude (above 30,000 ft)
11 – 12	Cruise 500 nm at Mach 0.8
12 – 13	Descend for normal approach and landing (2500 ft usable runway)
13 – 14	Taxi and shut down

Mission 2:

The second mission illustrates the requirement for long distance transportation and is shown in Fig. 1-2. The aircraft is required to travel a total distance of 3200 nm carrying a reduced payload of 10 tons. To complete this mission the aircraft is allowed to utilize in-flight refueling.

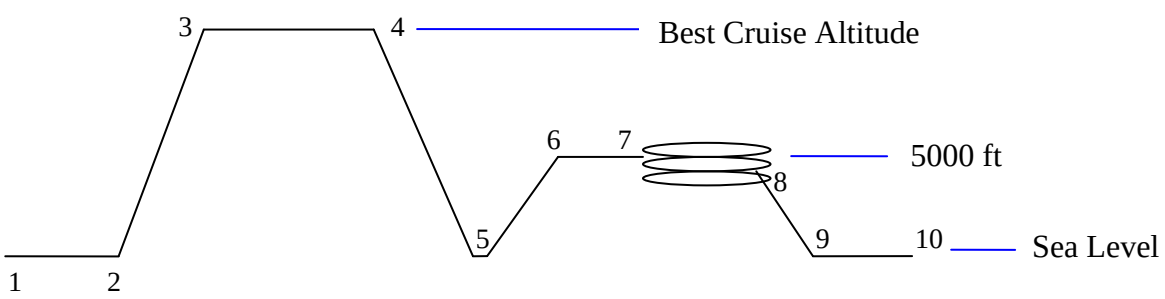

Figure 1-2. Mission Profile for the Ferry Mission

Table 1-2 gives a short description for each mission segment in Fig. 1-2.

Table 1-2. Ferry Mission Profile Descriptions

Segment	Description
1 – 2	Start up / taxi / takeoff
2 – 3	Climb to best cruise altitude (30,000 ft)
3 – 4	Cruise 3200 nm at 0.8 Mach (aerial refueling allowed)
4 – 5	Descend to sea level and perform a normal approach to landing
5 – 6	Missed approach: climb to 5000 ft
6 – 7	Divert 150 nm at 0.6 Mach
7 – 8	45 min holding pattern
8 – 9	Descend for normal approach and landing
9 – 10	Taxi and shut down

A summary of the mission requirements for both missions is provided in Table 1-3.

Table 1-3. Mission Performance Requirements

	TO Field Length (ft)	Range BCA (nm)	Range non-BCA (nm)	M_{max}	LDG Field Length (ft)	Headwind (knots)	Crosswind (knots)	Payload (tons)
Design Mission	2500	1000	200	0.8	3000	-5	25	30
Ferry Mission	2500	3200	0	0.8	2500	0	0	20

1.1.2 Mission Drivers

Review of the mission requirements show that two driving requirements for the configuration of the design. First of these is the short takeoff and landing (STOL) performance requirements. To achieve the required takeoff performance the aircraft needed to be able to create significant amounts of lift. This required extensive research and development of a superior high lift system to achieve a high C_{Lmax}. The high lift system is also required to comply with the

short landing distance. Furthermore, the landing gear and brake system are sized specifically to successfully stop such a large aircraft in the limited space available.

The second mission driver for this design is the required ability to cruise at transonic speeds. Cruise performance of most STOL aircraft is usually an afterthought in the design process. This was not the case in this design due to the requirement of a minimum cruise speed of Mach 0.8. This required the aircraft to be very aerodynamically efficient, something difficult to do if low speed lift is also necessary.

1.2 Current Aircraft Comparison

To gain perspective on the requirements of these missions, initial studies included an assessment of current military transport aircraft capabilities. Aircraft selected for comparison included the C-17 Globemaster III, C-130J Hercules, AN-72A Coaler and the YC-14 concept demonstrator. Table 1-4 compares the performance of these aircraft to the performance requirements of the RFP.

Table 1-4. RFP Requirements Compared with Similar Aircrafts

	RFP	C-17	C-130J	AN-72A	YC-14
Payload (lbs)	60,000	165,000	41,790	22,045	27,000*
TO Distance (ft)	2,500	7,740	2,050	3,055	< 2,000
LDG Distance (ft)	3,000	3,000	2,550	1,525	< 2,000
Range (nm)	3,2000	2,400	2,835	857	3,190
M_{cruise}	0.8	0.74	0.58	0.54	0.67
Service Ceiling (ft)	30,000	45,000	30,560	35,100	45,000

*short field payload

It is readily apparent that none of these aircraft meet all of the requirements of the RFP however the YC-14 comes close. A great deal of information about possible configurations can

still be gathered from a more detailed study of these aircraft. Details of the design configuration of each aircraft are located in Table 1-5.

Table 1-5. Similar Aircraft Characteristic Comparison

	C-17	C-130J	AN-72A	YC-14
TOGW (lbs)	585,000	155,000	76,060	170,000
W/S	153.95	88.8	71.62	96.5
T/W	0.273	8.44 lb/shp	0.376	0.6
Wing Sweep (deg)	25	0	17	0
S_{ht} /S_{wing}	0.222	0.218	--	--
S_{vt} /S_{wing}	--	0.146	--	--
High Lift System Specifics	Externally Blown Flap	Conventional Fowler Flap	Upper Surface Blown Flap	Upper Surface Blowing Concept
Fuel Fraction	0.309	0.296	0.375	--
Payload Fraction	0.282	0.269	0.289	0.159
# of Engines	4	4	2	2
Engine Type	F117-PW-100	Rolls Royce AE2100D3	ZMKB Progress/Ivchenko D-36	CF6-50D11
Engine Config	Pylon Mount	Pylon Mount	High Wing Mount	High Wing Mount
Tail Config	T-tail	Conventional	T-tail	High T-tail
Aspect Ratio	7.2	10.1	10.3	9.44

Similarities of these four seemingly different aircraft yield important information about necessary attributes of a successful transport aircraft. The payload fraction for all four aircraft is very similar. Therefore it is reasonable to expect that the payload fraction for the austere transport will be around 0.26 or 0.28. The AN-72A, which exhibits good takeoff performance, has a high thrust to weight ratio. Thrust to weight should therefore be investigated thoroughly in the initial design to determine the most appropriate ratio. The C-17 has good short field landing characteristics despite its size. Its flap system incorporates external blowing; the AN-72A uses

upper surface blowing on its flaps system. Blown flaps should be investigated to determine if they can be used to obtain the high lift required. The wing loading is also a good comparison point. The C-17 has the highest cruising speed of the comparator aircraft and has the highest wing loading. The aircraft with lower wing loadings (C-130, AN-72A and YC-14) all have slower cruising speeds. To obtain both good short field performance and higher cruising speeds an appropriate wing loading was initially thought to be somewhere between the C-17 and the C-130. A good beginning estimate for an appropriate wing loading is about 100 lb/ft^2. This comparison gives a good starting point for the initial design.

1.3 Initial Sizing

The initial aircraft sizing began by developing a Thrust-to-Weight versus Wing Loading chart (Fig. 1-3). The constraints were defined by the RFP and equations from Raymer were used for the takeoff and landing constraints. The following numbers were estimated to make the figure, a C_{Lmax} of 4.0, a gross takeoff weight of 225,000 lbs, and a takeoff parameter of 80.

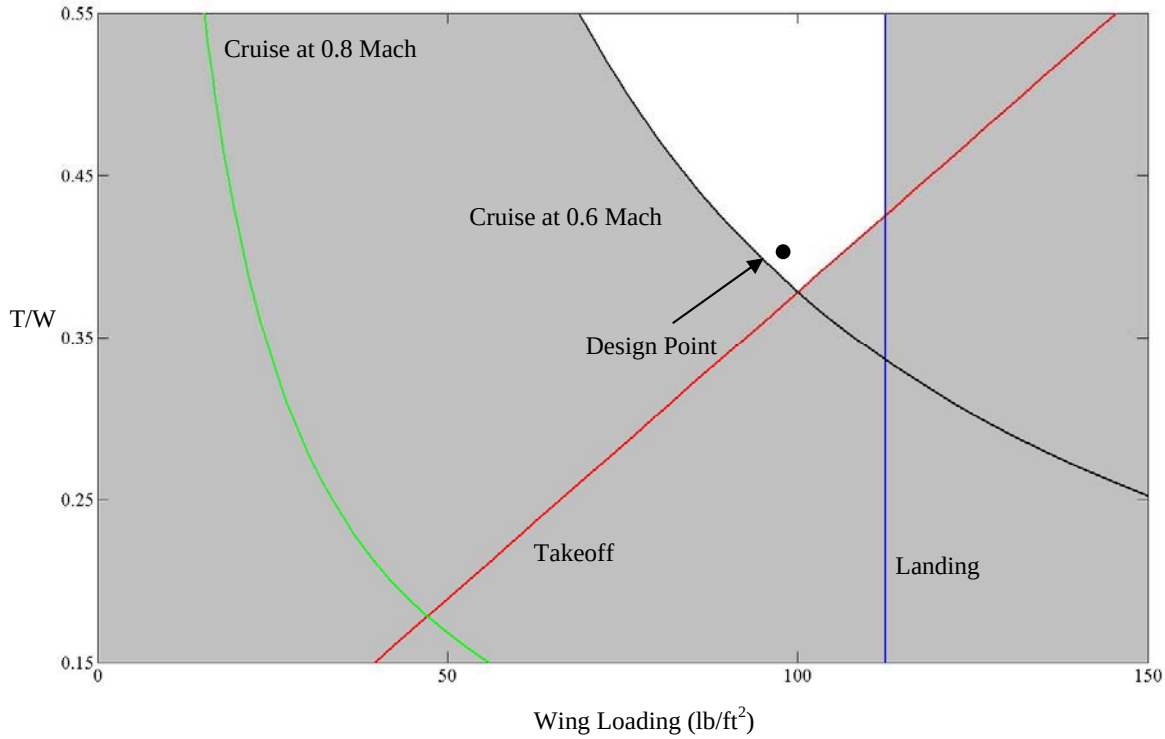

Figure 1-3. T/W vs. Wing Loading Diagram

The design point was found to be at T/W = 0.4 and W/S = 100 lb/ft^2. These parameters were used to size the wing. The design point had to be chosen carefully. A high wing loading is desirable for cruise while a low wing loading value is desirable for a slow landing. Using this design point a wing with a span of 144 ft, aspect ratio of 9.2, and wing area of 2257 ft^2 is desired.

Initial studies showed that an effective design would need to be balanced with a static margin between neutral and 15% stable. This led to the establishment of requirements for the sizing of the tail section of the aircraft. The horizontal tail needed to be sized so the aircraft could rotate with the CG in a forward location. Requirements for the vertical tail size were established as the ability to maintain zero sideslip during takeoff with an engine out. Further discussion of the development of the tail section is available in Section 7.0.

Optimization of this design included properly sizing the fuselage and wing to obtain the appropriate balance. As the weight and CG calculations improved the configuration was modified as necessary to improve the aerodynamics and performance. This optimization is discussed in Section 2.0.

2.0 Configurations

2.1 Initial Concepts

To begin the design process Initech Aircraft came up with seven initial design concepts. Because of some of the similarities between different concepts, five designs emerged. They can be seen in the Fig. 2-1 below. The first two concepts were of a wing mounted dual engine design. The only difference between the two is that one concept had strut braced wings while the other did not. The next concept was that of a wing mounted quad engine design. This design arose from other similar aircraft such as the C-17 and the C-130. Because of the cruise mach it leans more towards the C-17 in design similarities. The fourth concept was an aft mounted dual engine design that loosely resembles the MD-81, a commercial aircraft. The final design was that of an aft mounted dual engine V-tail concept.

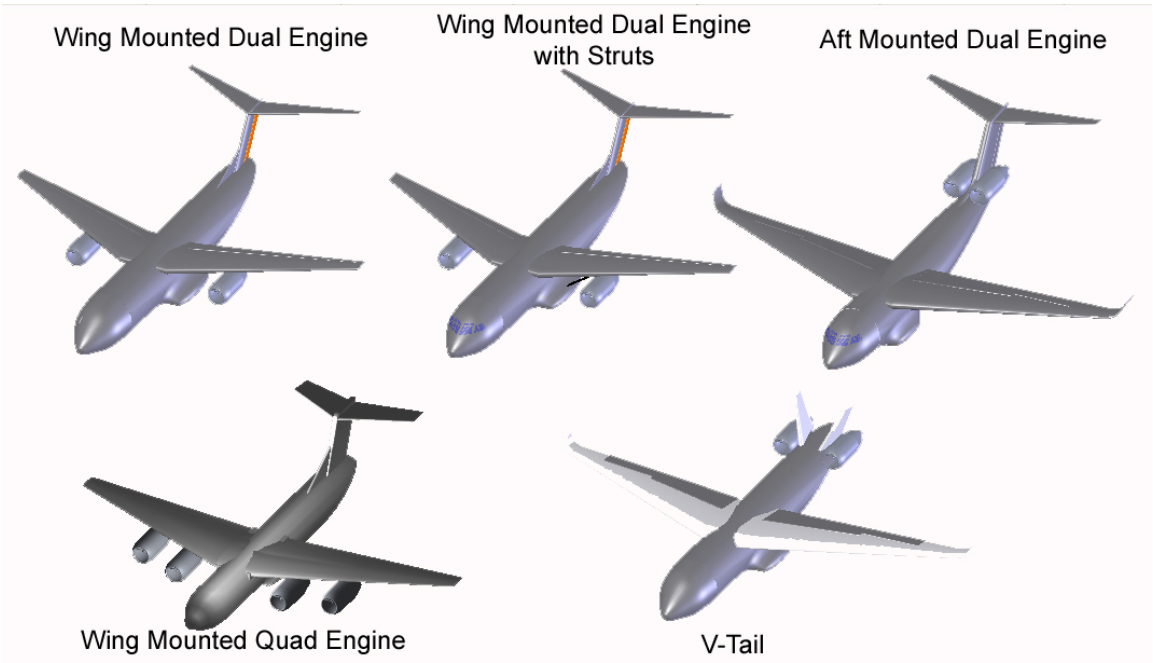

Figure 2-1. Initial Concepts

A central theme in the design process was to keep the design simple. In sticking with this theme, the V-tail design was able to be eliminated. To control the V-tail, complicated control systems would need to be developed which meant that this setup would have a higher cost to develop and produce. By sticking with the more conventional tail, control systems from other similar aircraft could be employed.

The most common form of high lift systems in current industry use externally blown flaps. The same simplistic reasoning was again applied to the remaining concepts with respect to there ability to achieve high lift and satisfy the STOL requirement. The aft mounted dual engine design would not be able to have an externally blown flap system because of the location of the engines. To avoid having to redesign a new high lift system from scratch, this design was also removed from our concepts.

The strut braced wing concept also brought some difficulties to the table. Because the lower surface blowing is a proven technology, it was decided that the engines would be mounted

underneath the wings. The addition of the strut to the lower surface of the wing would create more complex airflow interactions, the results of which have yet to be studied. To again simplify the process the strut design was eliminated. This left Initech Aircraft with three design concepts.

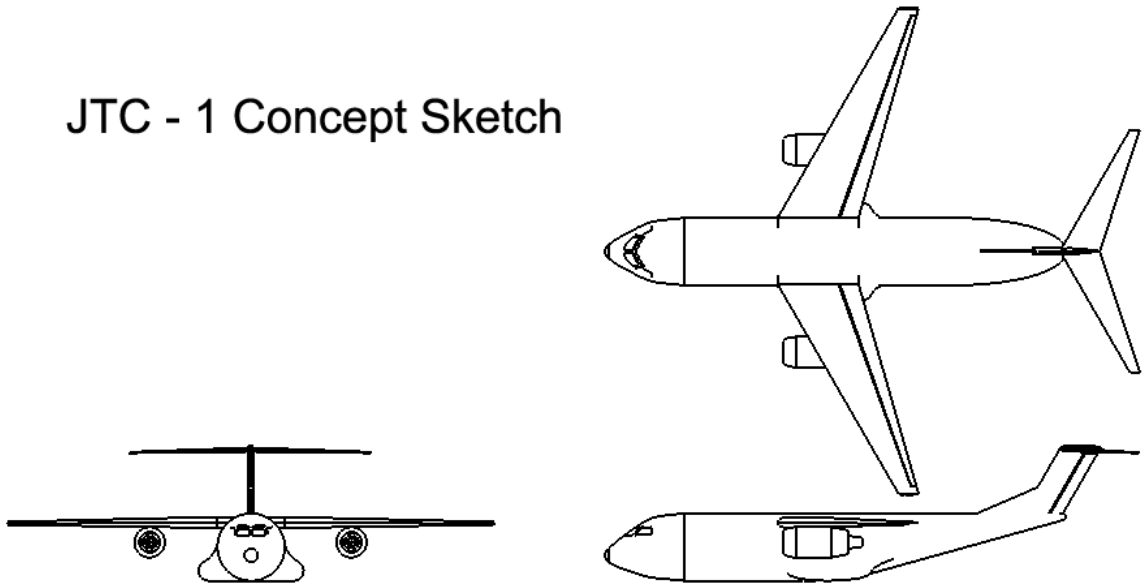

Figure 2-2. JTC-1: Two Engine Wing Mounted Concept

This design incorporated the three initial sketches and some influence from the C-17 design. The major difference between this aircraft and the C-17 is that this aircraft employs two engines instead of four and is sized to be much smaller. These engines are mounted on the underside of the wings using nacelles and pylons. The engine is approximately one inlet diameter below the leading edge of the wing and two inlet diameters in front of the leading edge of the wing. The high wing is used for several reasons. It allows the cargo bay to be lower to the ground for easier loading and unloading of cargo. The wing does not interfere with the cargo space because the wing run through is near the top of the fuselage. The high wing also places the engines and flaps far above the ground which allows for clearance of runway debris and FOD, which is particularly important in austere conditions. The added height to the wing will also

allow the flaps to be larger, meaning more lift will be available. For high lift purposes this design will utilize externally blown flaps. To achieve a more efficient cruise, wing sweep was added to the concept. This concept also features a fairly short fuselage length which reduces fuselage wetted area and allows for a tip back angle of approximately 12.5º. This aircraft also makes use of T-Tail. The T-tail puts the horizontal tail surface out of the wake of the wing and the engines. This concept also utilizes blisters along the bottom of the aircraft. The blisters allow the landing gear to be distanced further apart than if they were normally mounted to the fuselage creating a more balanced aircraft on the ground. The landing gear setup is similar to a multi bogey system.

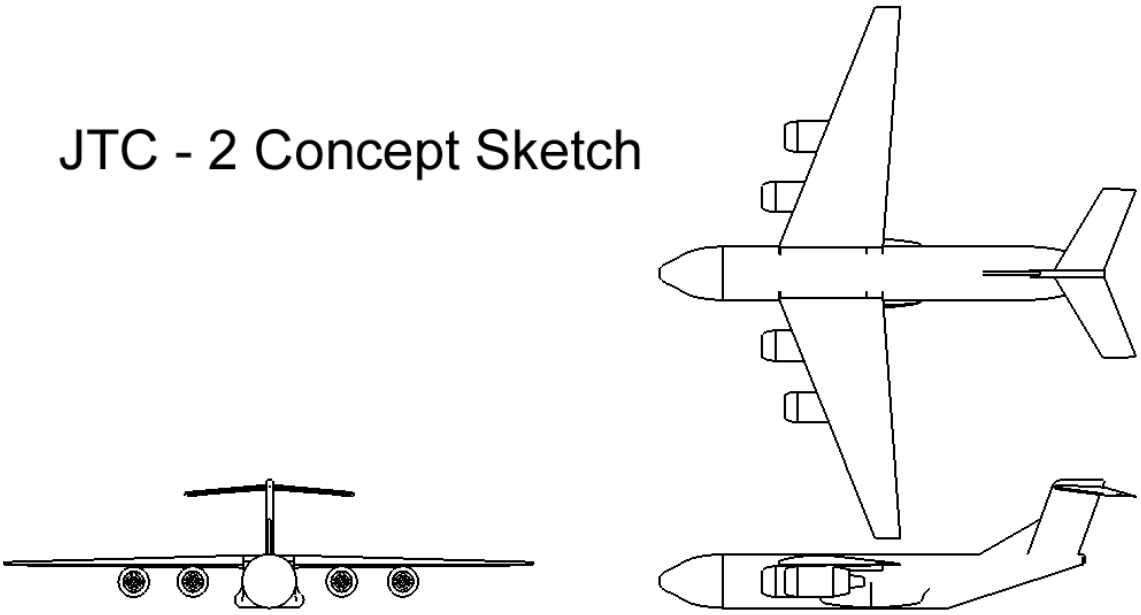

Figure 2-3. JTC-2: Four Engine Wing Mounted Concept

The Four Engine Wing Mounted Design is also very similar to the Two Engine Wing Mounted Design. It was developed using the one original four engine wing mounted design and the C-17 concept. The major difference between this design and the C-17 is the size of the aircraft. This design employs four wing mounted engines. These engines are mounted using

nacelles and pylons on the lower side of the aircraft wing. It also incorporates a high wing concept and T-tail which were described in further detail for the previous concept. The span for this aircraft was slightly smaller than the 2 engine aircraft because more thrust was available at takeoff and for cruise. The fuselage for this concept was longer than the two engine wing mounted design by five feet resulting in a smaller tip back angle of about 10.5º. This aircraft also utilizes blisters on the bottom of the fuselage for the same purpose as mentioned in the above two engine design. This concept has a multi bogey landing gear setup.

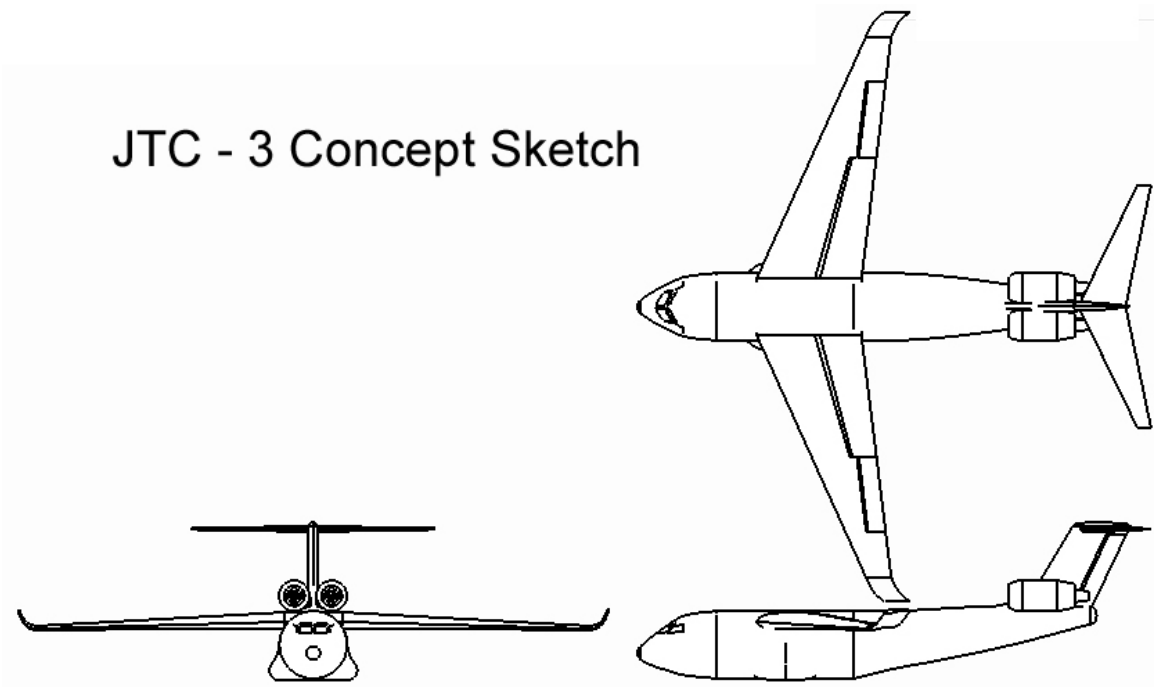

Figure 2-3. JTC-3: Two Engine Aft Mounted Concept

Out of the three further developed concepts the two engine aft mounted design is the outsider. This design was not based on any other aircraft but loosely resembles the McDonnell Douglas MD-81. It features two rear mounted engines on the top of the fuselage. It also has wing sweep for the same purposes as the other concepts. Similarly to the previous two designs, it uses a T-tail. There are two major disadvantages that this concept contains. The first is the

lack of wing loading relief. Since the engines are not mounted on the wings the engine weight cannot be used to help reduce the load from lift. This will increase the wing structural weight. The second major disadvantage is that a reasonably simple powered lift system will not be employable using this layout. This design uses a multi bogey landing gear setup.

2.2 Preferred Concept Selection

Using further analysis highlighted in the following report, Initech Aircraft chose its preferred concept. A decision matrix was developed and each category was given an appropriate score in accordance with the RFP details and team digression. A higher score for each category designates a more desirable design feature. In the weight group the two engine concept received the highest score because it had the lowest estimated TOGW. The aft engine design had a similar score but was a bit heavier because of a larger wing area. The four engine concept received the greatest takeoff performance because it had the largest thrust available at takeoff which was important for the STOL requirements. The aft mounted design did not meet our preliminary takeoff and landing distances so it subsequently received no rating. For the cruise performance, Initech primarily looked at the available thrust again and the four engine concept was able to achieve the cruise mach of 0.8 the easiest. Basic aerodynamic analysis showed that the aft engine had the least amount of wetted area while the four engine design had the most. The two engine design received a poor rating in the stability section because engine out conditions made it difficult to maintain straight and level flight. Propulsion was somewhat repetitive and was based on the amount of thrust that would be available per engine. Structures and cost were based on much rougher estimates. Since they made up only fifteen percent of the weighted score they did not critically affect the outcome of the decision. The wing mounted quad

engine design was chosen because of its short takeoff and landing characteristics, and its ability to maintain straight and level flight in case of engine failure.

Table 2-1. Preferred Concept Decision Matrix

	Weights	Take Off Performance	Cruise Performance	Aerodyamics	Stability	Propulsion	Structures	Cost	Percentage
Max Score	15	20	15	15	10	10	10	5	100
2 Engine	12	13	8	12	4	8	8	4	69
4 Engine	7	18	12	10	9	10	8	1	75
Aft Engine	10	0	10	11	8	8	7	3	57

2.3 JTC-2 E Swingliner Development

With the preferred concept selected, it was time to begin refining that design to ensure optimal performance throughout the missions. This was accomplished by improving all of the weight, size and performance calculations. The JTC-2 four engine concept evolved through several stages. The first and final versions are shown in Fig. 2-4. The JTC -2 E Swingliner is the final iteration in this reconfiguration sequence.

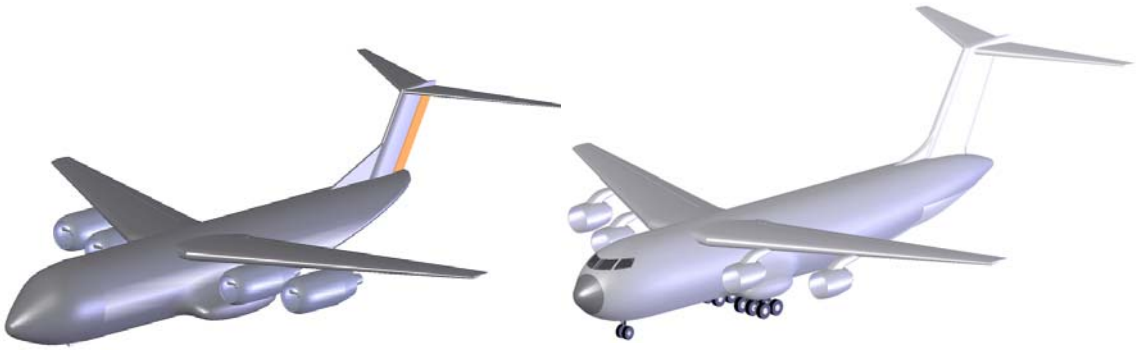

JTC-2A **JTC-2E**

Figure 2-4: JTC-2 Four Engine Concept Evolution

The JTC-2 E Swingliner seen in the following foldout has an overall wing span of 144 ft and an overall length of 157 ft. The takeoff gross weight for the primary mission is 219,525 lbs. Further discussion of the Swingliner's capabilities is provided in the following sections.

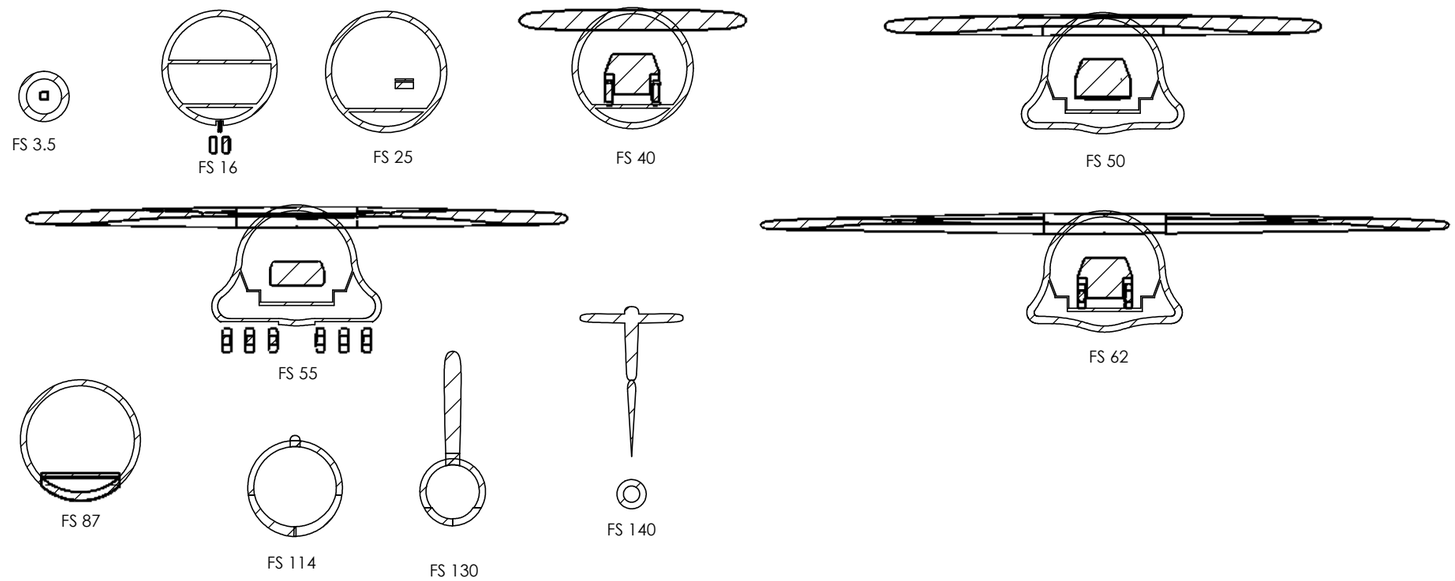

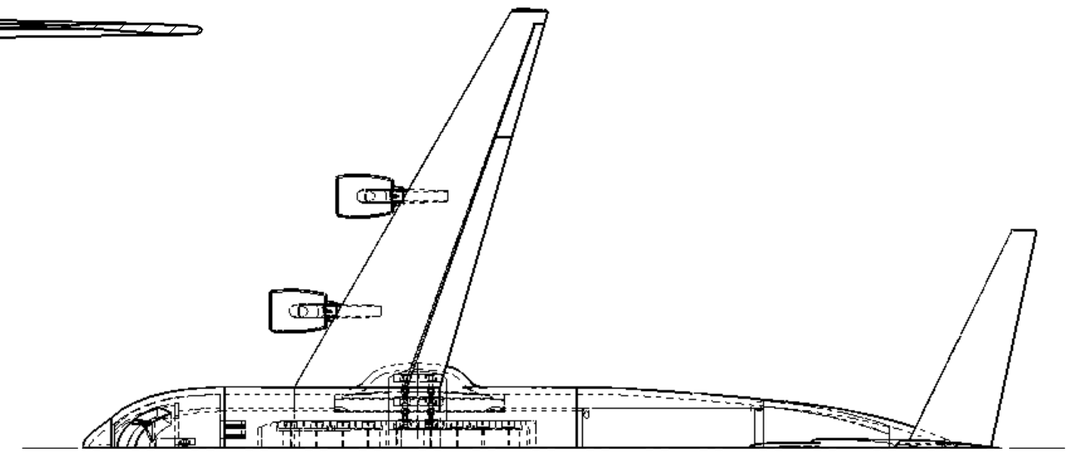

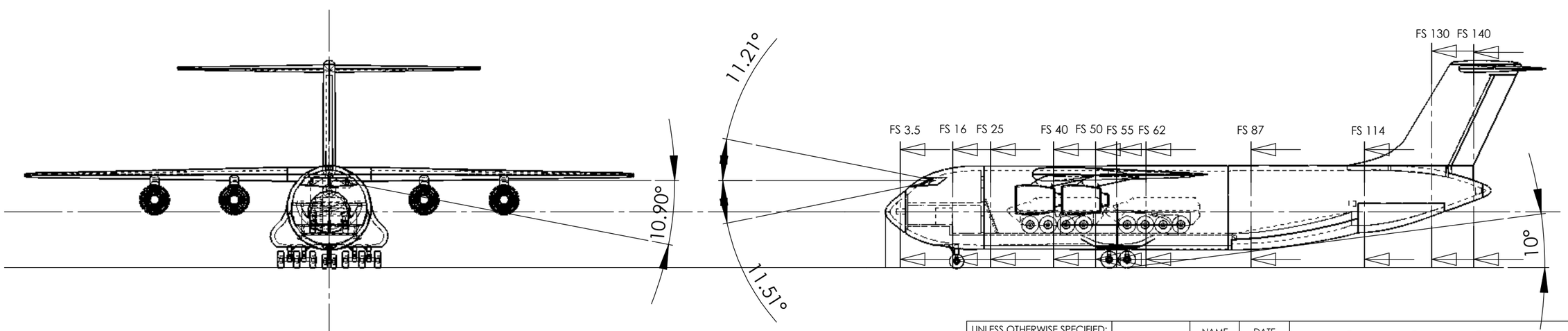

UNLESS OTHERWISE SPECIFIED:		NAME	DATE	INITECH AIRCRAFT CORP.
DIMENSIONS ARE IN FEET FS MEASURED IN FEET	DRAWN	GC	4/02/07	TITLE: JTC-2E Swingliner Profile
	CHECKED			
	ENG APPR.			
	MFG APPR.			
	Q.A.			
	COMMENTS:			SIZE B / DWG. NO. / REV
				SCALE 1/300 / SHEET 1 OF 1

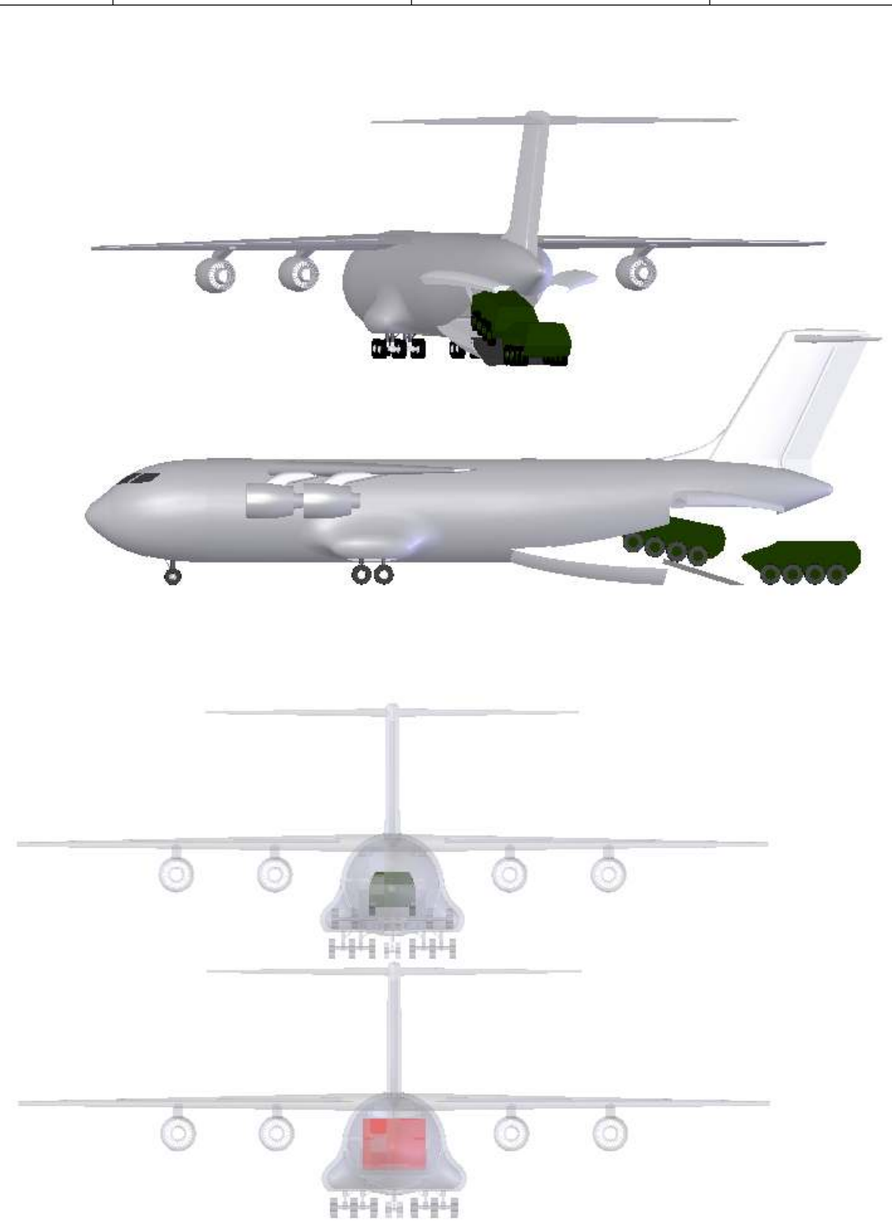

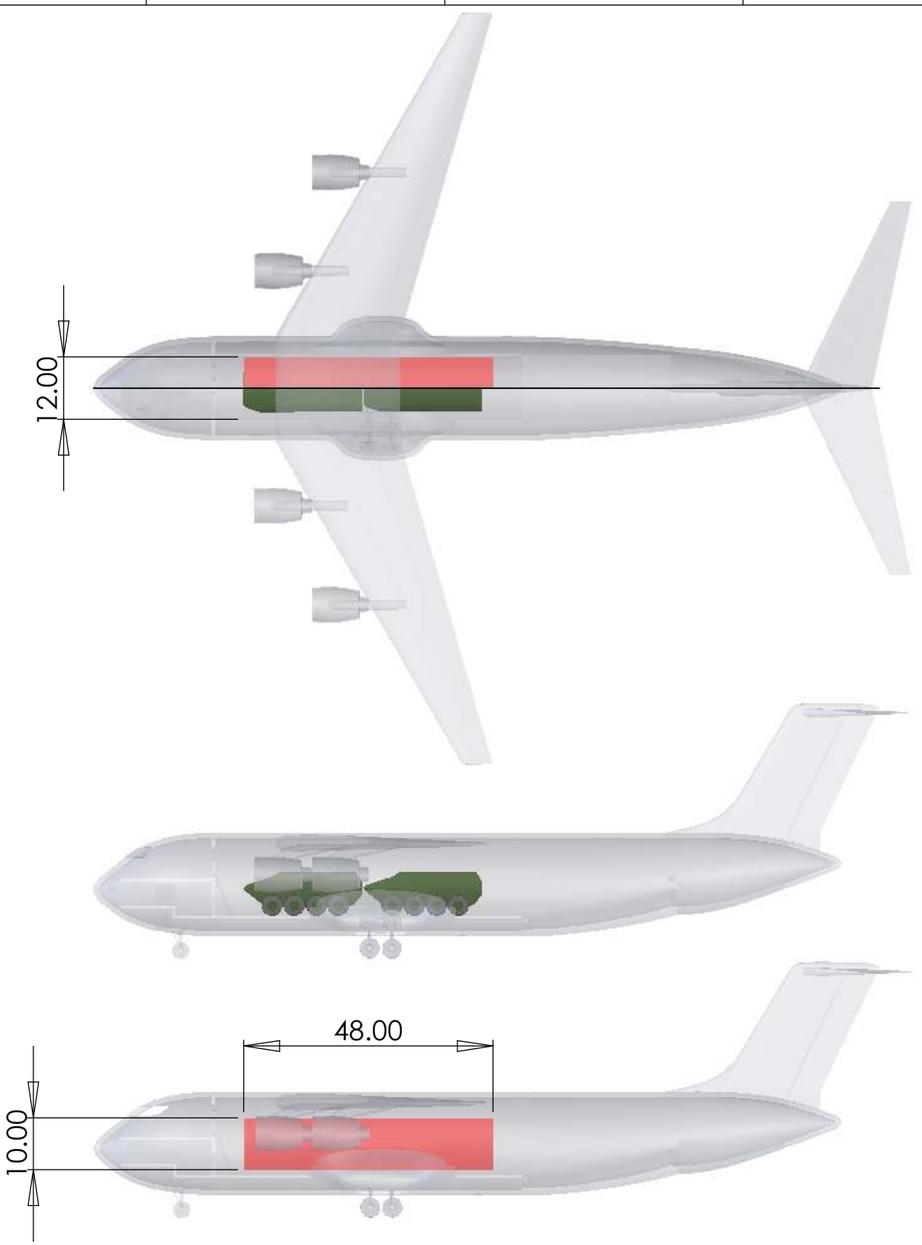

UNLESS OTHERWISE SPECIFIED:		NAME	DATE	INITECH AIRCRAFT CORP.
DIMENSIONS ARE IN FEET	DRAWN	GC	5/02/07	TITLE: JTC-2E SWINGLINER
	CHECKED			
	ENG APPR.			
	MFG APPR.			
	Q.A.			

COMMENTS:
RED PAYLOAD SPECIFIES INITIAL DIMENSIONS

GREEN PAYLOAD IS SCALED STRYKER MODEL

SIZE	DWG. NO.	REV
B		
	SCALE 1/350	SHEET 1 OF 1

3.0 Performance

3.1 Takeoff Performance

One of the primary distinguishing factors of the Swingliner is its short takeoff and landing capabilities. Therefore, fulfilling the takeoff and landing constraints is crucial to the design. For both missions, the Swingliner must be able to takeoff within a 2500 ft BFL. A program was compiled to analyze the takeoff performance of the Swingliner. Takeoff conditions at sea level were assumed. Both standard day and hot day (95°F) conditions were analyzed. Takeoff is illustrated in the subsequent figure, broken up into three segments: ground roll, rotation, and liftoff. The RFP requirement is that the aircraft clear a 50 ft obstacle, which is demonstrated in the following figure.

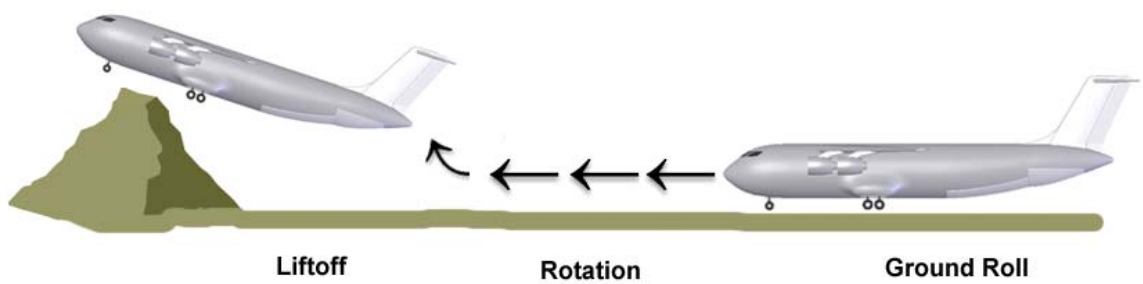

Figure 3-1. Take Off Over a 50 ft Obstacle

The decision of how much to scale the engines was based on fulfilling the request for proposal (RFP) requirements for takeoff distance and balanced field length. A comparison chart was developed, listing the calculated values for takeoff distance and balanced field length at each scaling factor for a C_{Lmax} value of 3.6 and a C_{Lmax} value of 4. This chart demonstrates how scaling down the engines by various percentages affects the takeoff performance. Table 3-1

shows the takeoff and balanced field length distances for a C_{Lmax} values of 3.6 and 4.0 versus scaled engine percentages.

Table 3-1. Comparison of Takeoff Distances*

Scaled Percentage	C_{Lmax} =3.6		C_{Lmax} =4.0	
30	TO Distance	2300	TO Distance	2100
	BFL	2550	BFL	2320
25	TO Distance	2200	TO Distance	2020
	BFL	2450	BFL	2230
20	TO Distance	2050	TO Distance	1950
	BFL	2270	BFL	2150

** Hot day conditions used (ρ = 0.002223 sl/ft^3)*

Based on this analysis, the Swingliner will employ engines scaled down 25 percent. At a C_{Lmax} value of 4 the Swingliner will takeoff in 2020 ft and has a balanced field length of 2230 ft. The Swingliner can achieve a C_{Lmax} value of 4 but will be flying 90% of that at a C_{Lmax} value of 3.6 for which the Swingliner will takeoff in 2200 ft and has a balanced field length of 2450 ft. At a C_{Lmax} value of 4 the RFP requirements are easily fulfilled and at a C_{Lmax} value of 3.6 the aircraft takes off in 2450 feet, falling within the 2500 ft requirement. Therefore the Swingliner will successfully takeoff within the required takeoff distance and balanced field length.

Parameters for the Swingliner such as weight and thrust were confirmed through weights and propulsion analysis. To determine if the airplane would meet the minimum required RFP conditions the program was run with various inputs, including the aforementioned, as well as, density, wind force, number of engines, rolling friction coefficient, breaking friction coefficient, stall margin, decision time between engine failure and braking, obstacle height, and thrust equation coefficients. The takeoff program used traditional equations of motion to determine the values for takeoff distance and balanced field length, but to establish those values other takeoff components were computed. Table 3-2 shows the results from the takeoff program.

Table 3-2. Take Off Program Results

Takeoff Analysis:	Standard Conditions: (ρ = 0.0023769 sl/ft^3)	Hot Day conditions: (ρ = 0.002223 sl/ft^3)
Rotation Air Velocity (ft/s)	168	174
Rotation Ground Velocity (ft/s)	168	174
Liftoff Air Velocity (ft/s)	207	212
Liftoff Ground Velocity (ft/s)	207	212
Ground Velocity over obst. (ft/s)	226	232
Air Velocity over Obst. (ft/s)	226	232
Rotation Distance (ft)	1002	1074
Liftoff Distance (ft)	1564	1654
Distance to Obst. (ft)	2097	2201
Rotation Time (sec)	12	12
Liftoff Time (sec)	15	15
Time to Obst. (sec)	17	17
Critical Velocity (ft/s)	129	134
Decision Velocity (ft/s)	159	163
Velocity over Obst. (ft/s)	212	219
Critical Distance (ft)	572	617
Decision Distance (ft)	1003	1062
Balanced Field Length (ft)	2308	2445
Critical Time (s)	9	9
Decision Time (s)	12	12
OEI Takeoff Time (s)	19	19
Total Takeoff Dist (ft)	**2100**	**2200**
Total Takeoff Time (sec)	17	17
Balanced Field Length (ft)	**2310**	**2450**

3.2 Mission Performance Analysis

Once the concepts were defined and initial sizing completed a basic study of the fuel required for each mission was completed. This analysis was completed using Mission Analysis 1.3 which is a basic analysis program developed by the Aerospace department at Virginia Tech. This program steps the aircraft though a defined mission profile calculating various parameters such as fuel burn, C_L, L/D, etc. As the design evolved this program was used to evaluate how

well each configuration preformed each of the required missions. The design progressed to the Swingliner and significant efforts were made to optimize its mission performance. Specific attention was paid to optimizing cruise performance (L/D) and this resulted in a high cruise altitude.

Figure 3-2 shows the mission profile chosen for the Swingliner. Table 3-3 provides the data from the program. The primary mission is flown with an internal fuel weight of 70,000 lbs at takeoff. The total takeoff gross weight is 219,500 lbs.

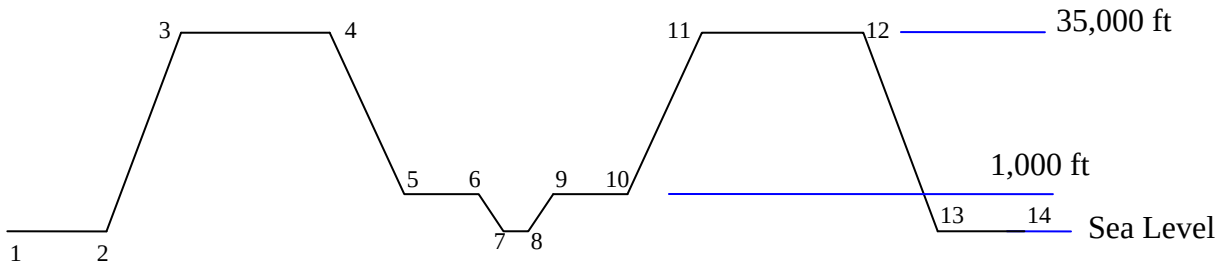

Figure 3-2. Primary Mission Profile

Table 3-3. Primary Mission Analysis Results

Mission Segment	Mach	Alt (ft)	C_L	C_d	L/D	Time (min)	Fuel (lb)	Dist (nm)
1. Start up and taxi	-	sl	-	-	-	8	1166	0
2. Short field takeoff	-	sl	-	-	-	2	1564	-
3. Climb to 35,000 ft at best economy climb		climb	-	-	-	11.86	4279	49
4. Cruise 500 NM at 0.8 Mach	0.8	35000	0.405	0.0323	12.55	65.04	12087	500
5. Descend to 1,000 ft	-	descent	-	-	-	17	2150	-
6. Cruise 100 NM at 0.6 Mach	0.6	1000	0.1639	0.0248	6.6	15.17	5798	100
7. Descend and perform short field landing	-	sl	-	-	-	4	3745	-
8. Taxi and drop payload	-	sl	-	-	-	15	1606	0
9. Take off under combat rules	-	sl	-	-	-	2	1950	-
10. Climb to 1,000 ft		climb	-	-	-	0.17	134	1
11. Cruise 100 NM at 0.6 Mach	0.6	1000	0.1008	0.0322	3.13	15.17	7087	100
12. Climb to 37000 ft at best economy climb		climb	-	-	-	13.55	4240	39
13. Cruise 500 nm at 0.8 Mach	0.8	37000	0.2303	0.036	6.39	65.04	12216	500
14. Descend for normal approach and landing	-	descent	-	-	-	17	1398	-
15. Land	-	sl	-	-	-	4	3805	-
16. Taxi and shut down	-	sl	-	-	-	10	1388	-
Totals						**265**	**64613**	**1289**

These results show that the primary mission can be completed with a total fuel load of 70,000 lbs. This information will be used to size the fuel tanks inside the aircraft wings.

The same analysis was preformed with the ferry mission yielding good data from which more details could be determined. Figure 3-3 shows the appropriate mission profile determined by the mission analysis. Table 3-4 summarizes the results of the analysis. The ferry mission is flown with an initial internal fuel weight of 45,000 lbs at takeoff. The Swingliner will refuel once in flight receiving 50,000 lbs of fuel. The total takeoff gross weight is 154,500 lbs.

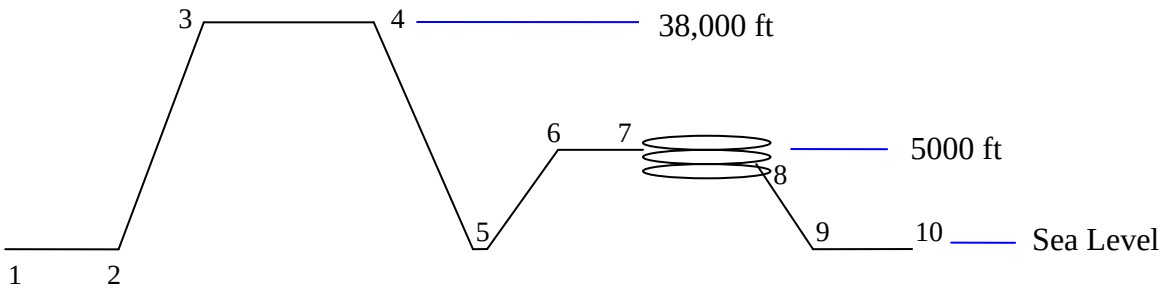

Figure 3-3. Ferry Mission Profile

Table 3-4. Ferry Mission Analysis Results

Mission Segment	Mach	Alt (ft)	C_L	C_d	L/D	Time (min)	Fuel (lb)	Dist (nm)
1. Start up/ taxi/ take off	-	sl	-	-	-	10	2730	-
2. Climb to 35,000 ft	0.16 - 0.41	climb	-	-	-	8.36	3036	25
3. Cruise 3200 NM at 0.8 Mach								
(1) Cruise 250 NM	0.8	35000	0.278	0.0268	10.35	32.52	5124	250
(2) Refuel (take on 50,000lbs of fuel)	0.43	35000	-	-	-	15	1450	78
(3) Climb to 38,000 ft	0.43-0.49	38000	-	-	-	1.88	328	11
(4) Cruise 2950 NM	0.8	38000	0.420	0.0293	14.00	385.73	57741	2950
4. Descend to Sea Level and Land	-	descent	-	-	-	23	5443	-
5. Reserve Fuel								
(1) Climb to 5000 ft	-	climb	-	-	-	0.65	472	2
(2) Divert 150 nm at 0.6 Mach	0.6	5000	0.120	0.0227	6.25	23.07	6983	150
(3) 45 min holding pattern	0.19	5000	-	-	-	45	3429	92
(4) Descend and Land	-	sl	-	-	-	6.5	3563	-
6.Taxi and shut down	-	sl	-	-	-	10	1434	-
Totals						**561**	**91733**	**3558**

3.3 Landing Performance

To evaluate the landing performance another program was created to determine the landing distance for the Swingliner and to confirm it would land within the RFP requirement of 2500 ft for the ferry mission and 3000 ft for the primary mission. Another requirement is that the Swingliner be able to land in a crosswind of 25 knots and tail wind of 5 knots. The program

was written to include these parameters and factor them into the landing distance. Landing with a component of crosswind makes it more difficult to stay aligned with the runway. To stay aligned with the designated path the heading must be slightly offset towards the airflow or crosswind. A faster approach speed is necessary on landing and in turn results in the landing distance being slightly greater than normal. The engines are capable of producing 10,000 lbs per engine of reverse thrust that our aircraft will utilize to offset the affects of the crosswinds and headwinds forces (among other things) and in turn to attain the required landing distance requirements.

The program computed various elements of landing such as, touchdown velocity, approach angle, approach distance, free roll distance, and braking distance. Among others these are listed in the landing analysis table below.

Table 3-5. Landing Analysis Output

Landing Analysis:	**Standard Conditions: (ρ = 0.0023769 sl/ft^3)**	**Hot Day conditions: (ρ = 0.002223 sl/ft^3)**
Stall Velocity (ft/s)	161	166
Approach Velocity (ft/s)	185	191
Touchdown Velocity (ft/s)	185	191
Average Flare Velocity (ft/s)	185	191
Vertical Touch Down Velocity (ft/s)	83	86
Horizontal Touch Down Velocity (ft/s)	165	171
Approach Angle (deg)	27	27
Flare Height (ft)	13	14
Approach Distance (ft)	74	72
Flare Distance (ft)	53	57
Free Roll Distance (ft)	556	574
Braking Distance (ft)	556	1768
Total Landing Distance (ft)	2342	2471

**5 knot tail wind included*

3.4 Performance Summary

Table 3-6 shows the performance summary for the Swingliner. This table shows that the Swingliner can takeoff and land within the RFP required distances in both standard conditions and hot day conditions.

Table 3-6. Performance Summary

	Standard Conditions: (ρ = 0.0023769 sl/ft^3)	**Hot Day conditions: (ρ = 0.002223 sl/ft^3)**
Maximum Takeoff Distance (ft)	2500	2500
Actual Takeoff Distance (ft)	**2100**	**2200**
Maximum Balanced Field Length (ft)	2500	2500
Actual Balanced Field Length (ft)	**2310**	**2450**
Maximum Landing Distance (ft)	2500	2500
Actual Landing Distance (ft)	**2340**	**2470**

4.0 Aerodynamics

There were several driving factors for the design of the Swingliner's wing. To meet the RFP cruise requirement of 0.8 Mach, the wing planform and airfoil design had to be optimized. The RFP STOL requirements made it necessary for the aircraft to have a powered lift system to reach the needed C_{Lmax}.

4.1 Planform Refinement

The first iteration of the Swingliner planform was extremely oversized. Therefore the first sizing of the Swingliner was much larger than the final sizing. The planform design went through several iterations until a desirable planform was found. Figure 1-3 shows the wing loading and thrust-to-weight design point. A wing loading of W/S = 97 lb/ ft^2 yields S_{ref} = 2257 ft^2. The Wing Planform Analysis Program[1] was used to verify the predicted wing points. The program gave the mean aerodynamic chord (MAC), aspect ratio, average chord, and taper ratio values. Table 4-1 shows the original planform configuration and the final planform configuration for the Swingliner.

Table 4-1. JTC Planform Comparisons

	JTC-2 A	JTC-2 E
S_{ref} (ft^2)	3260	2260
LE Sweep (deg)	22.2	30
Span (ft)	159	144
Aspect Ratio	7.75	9.2
Taper Ratio	0.24	0.26
MAC (ft)	31.0	17.6

For the final configuration a higher aspect ratio was desired for better performance in cruise. An increased aft sweep was also desired for cruise at 0.8 Mach.

4.2 Airfoil Selection

Results from the Mission Analysis program, as well as, initial sizing gave the aerodynamic requirements. The 3D characteristics for the swept wing were found and translated into 2D characteristics. Table 4-2 shows the 3D characteristics that were used to find the 2D requirements for the airfoil.

Table 4-2. Airfoil Selection Characteristics

3D Characteristics		2D Characteristics	
LE Sweep	30°	**LE Sweep**	-
$C_L$cruise	0.475	**$C_L$cruise**	0.633
Mach	0.8	**Mach**	0.693
Re	29.6 million	**Re**	29.6 million
t/c	0.12	**t/c**	0.139

A supercritical airfoil was chosen to help delay separation at the cruise speed. The SC(2)-0614 airfoil shown in Fig. 4-1 was found to have the equivalent 2D characteristics required.

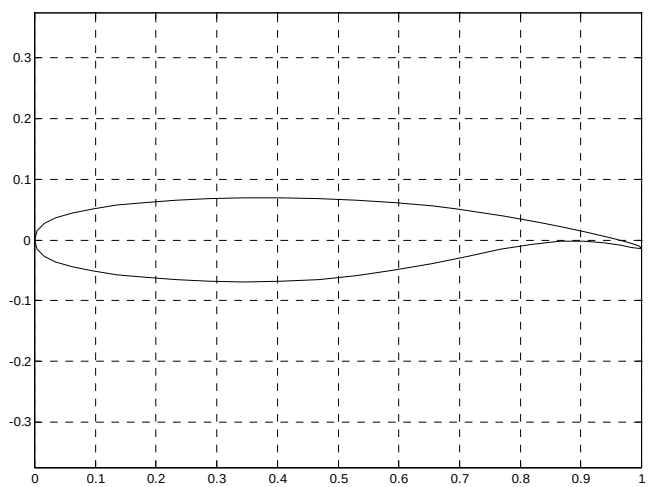

Figure 4-1. SC(2)-0614 Airfoil Section

TSFOIL2[2] was used to analyze several airfoils at the cruise conditions. SC(2)-0614 was found to have the best pressure distribution, as well as, meet the C_l requirements. Figure 4-2 shows the pressure distribution of the airfoil at the 2D cruise conditions.

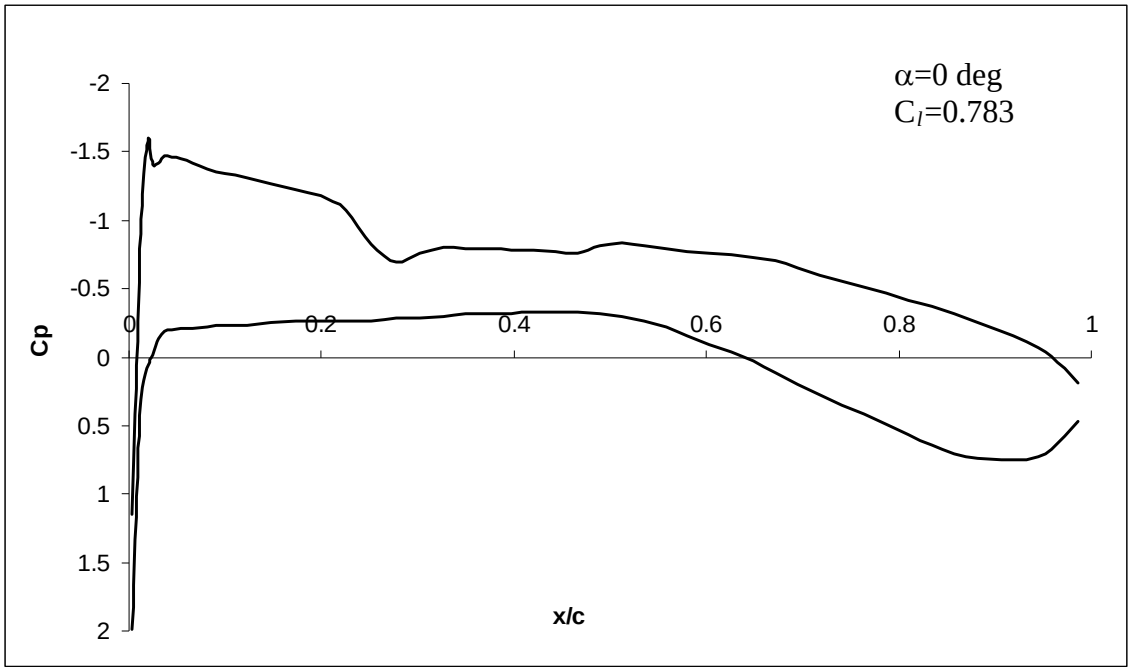

Figure 4-2. Pressure Distribution for Airfoil

Similar analysis was done to select airfoils for the horizontal and vertical tail. Table 4-3 shows the selected airfoil sections for each surface of the aircraft. Figure 4-3 shows the tail airfoil sections.

Table 4-3. Selected Airfoils for Each Surface

Surface	Airfoil Section
Wing	SC(2)-0614
Horizontal Tail	63-510
Vertical Tail	63-012

Horizontal Tail, 63-510

Vertical Tail, 63-012

Figure 4-3. Tail Airfoil Sections

4.3 Lift

To meet the RFP takeoff and landing requirements a high lift system had to be designed. Figure 1-3 shows the wing loading and thrust to weight design point. A wing loading of W/S = 100 lb/ ft^2 yields S_{ref} = 2257 ft^2. To meet the RFP takeoff requirement of 2,500 ft a C_{Lmax} of 3.6 is desired. This C_{Lmax} indicates that a mechanical lift system will not be enough. This high C_{Lmax} value can only be accomplished with a powered lift system. To accomplish the RFP STOL requirements an externally blown flap system is incorporated in the design of the Swingliner.

A Rockwell International paper[3] on externally blown flaps shows that using a triple slotted flap over a double slotted flap had little effect on the overall C_L. A triple slotted flap system would add extra weight, as well as, more complexity to the design. For this reason, a double slotted fowler flap system was chosen. A partial span of 0.3c with takeoff and landing flap deflections of 25°, and 50° is used. A leading edge Krueger flap is also incorporated. Table 4-4 shows locations and deflections of the high lift devices.

Table 4-4. High Lift Devices

High Lift Device	Location	Deflection	% Chord
Fowler Flaps	Trailing Edge	25°, 50°	30
Krueger Flaps	Leading Edge	40°	15

The flap gap is set at 3% of the chord. Reference 3 shows that the optimum flap gap for an externally blown flap system is 3-3.5% of the chord. Figure 4-4 shows the flap configuration. All dimensions are in percent chord.

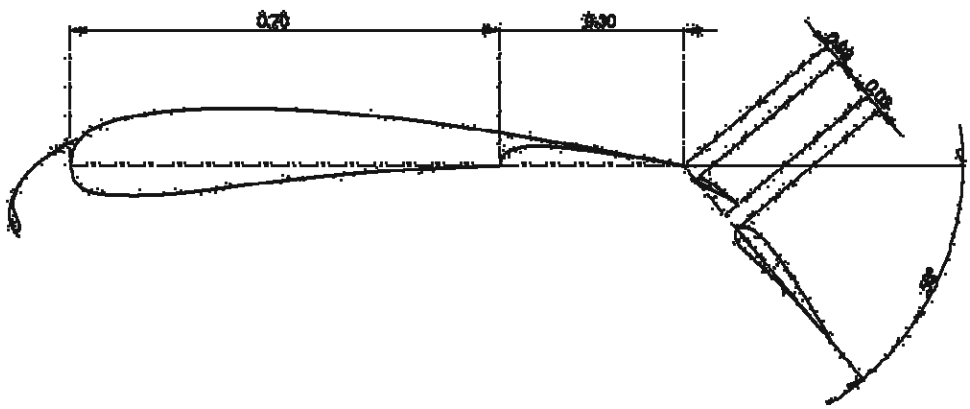

Figure 4-4. Wing Cross Section with Flaps Deflected

The lift curve was found for the clean configuration, flaps down configuration and for the powered lift. Powered lift C_l values were estimated using the method described in Reference 4. Methods from Roskam[5] were used to find change in lift due to flap deflection. The flap down configuration is for a trailing edge deflection of 50° and a leading edge deflection of 40°. Figure 4-5 shows the 2D lift curve slope for a clean configuration, flaps down configuration, and externally blown flaps.

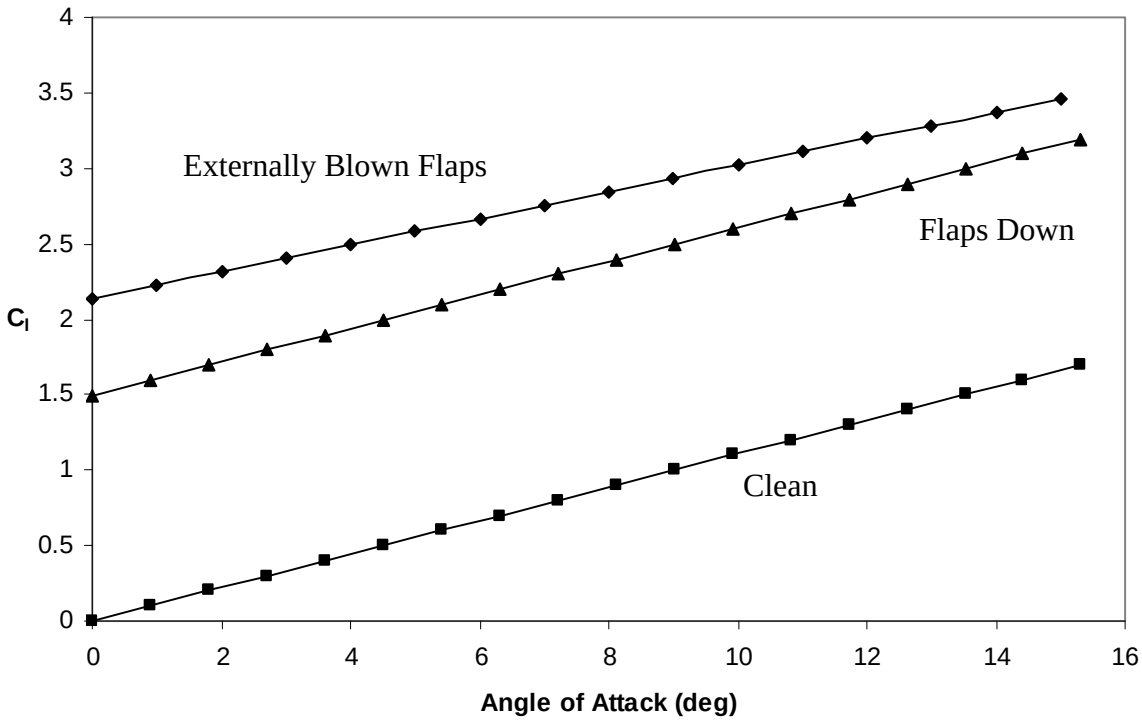

Figure 4-5. 2D Lift Curve

Figure 4-5 shows that the needed C_l values can be met at moderate angles of attack. Combining the powered lift and the lift given by the double slotted flaps easily yields a C_{Lmax} of 4.

4.4 Span Loading

The vortex lattice method, VLMpc[6], was used to find the span load distribution for the wing in cruise. The wing leading and trailing edge points were entered into the program. The wing was defined with 20 panels across the span. Figure 4-6 shows the span load coefficient versus the span location.

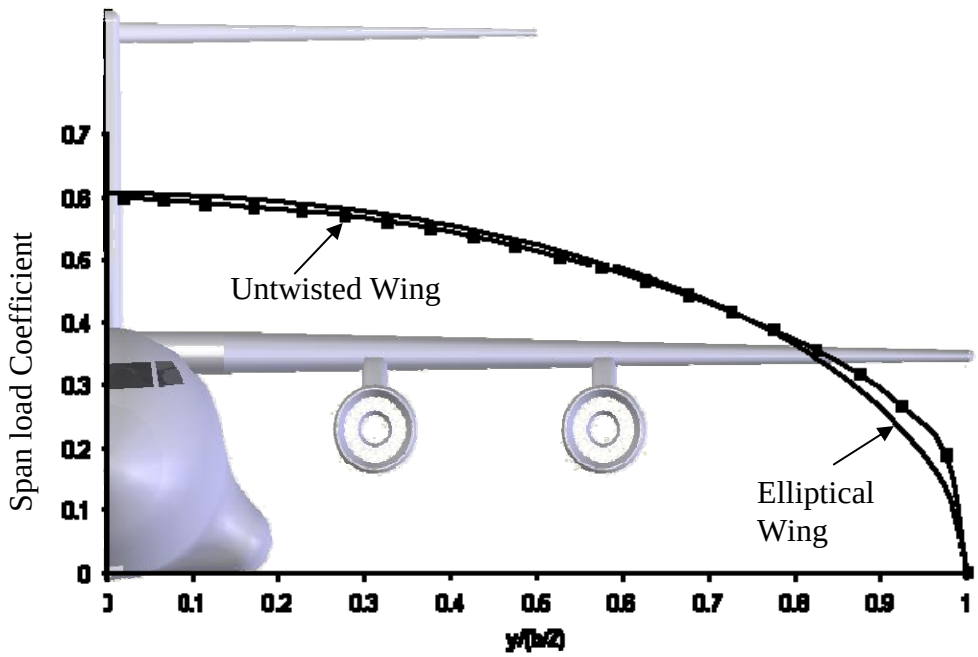

Figure 4-6. Span Load Distribution for Wing

From Fig. 4-6 it can be seen that the span loading on the Swingliner's wing is nearly elliptical. Therefore, no twist is incorporated in the wing.

4.5 Drag

The drag buildup was found by using the method described in Raymer[7]. The FRICTION program[8] was used to find the parasite drag and Equation 4-1 to find the total the drag coefficient.

$$C_D = C_{D0} + \frac{1}{\pi A \mathrm{Re}} C_L^{\ 2} \tag{4-1}$$

Where the aspect ratio is 9.2 and the Oswald efficiency is 0.85. The parasite drag is based on the wetted areas of the components of the aircraft: wing, fuselage, vertical tail, horizontal tail, blisters, and nacelles. Methods in Raymer were used to approximate the parasite drag caused by the upsweep of the fuselage, as well as, the landing gear, and flaps. Table 4-5 shows the drag

buildup for cruise. The drag due to upsweep was estimated using Raymer with an upsweep angle of about 12°.

Table 4-5. Cruise Parasite Drag Buildup

Component	S_{wet} (ft^2)	Reference Length (ft)	C_f	ΔC_{D0}
Wing	3665	17.5	0.003808	0.00418
HT	2250	8.4	0.002636	0.00278
VT	750	12	0.000834	0.00090
Blisters	930	16	0.000987	0.00204
Fuselage	4180	74.2	0.003539	0.00799
Nacelles	420	11	0.000471	0.00577
Upsweep	-	-	-	0.01048
Total C_{D0}				**0.03414**

Table 4-6 shows the parasite drag buildup for takeoff, cruise, and landing configurations.

Table 4-6. Parasite Drag Buildup

Conditions	Takeoff	Cruise	Landing
Altitude (ft)	Sea Level	38,000	Sea Level
Flap Deflections (deg)	25,50	0	25,50
Gear	Extended	Retracted	Extended
Component C_{D0}			
Wing	0.00471	0.00418	0.00464
HT	0.00302	0.00278	0.00318
VT	0.00095	0.00090	0.00105
Blisters	0.00221	0.00204	0.00232
Fuselage	0.00867	0.00799	0.00906
Nacelles	0.00627	0.00577	0.00659
Upsweep	0.01048	0.01048	0.01048
Landing Gear	0.00642	0.00000	0.00642
Flaps	0.01915	0.00000	0.01915
Total C_{D0}	**0.06189**	**0.03414**	**0.0629**

Table 4-7 shows the lift coefficients, drag coefficients, and the lift to drag ratios for landing, takeoff, and cruise. The drag coefficients were found using equation (4-1) with drag reduction techniques incorporated.

Table 4-7. Lift to Drag Ratios for Each Configuration

	Takeoff	Cruise	Landing
Weight	225,000	209,491	157,080
Altitude (ft)	Sea Level	38,000	Sea Level
Velocity (knots)	123	459	98
C_L	3	0.475	2.5
C_D	0.42	0.033	0.31
L/D	7.2	14.2	8.14

To reduce the overall drag on the aircraft vortex generators will be incorporated in the fuselage. Studies have shown that vortex generators located on the fuselage forward of the upsweep can reduce the overall drag on the aircraft by 150 counts[9]. This information was used to reduce the overall drag by 100 counts. The resulting drag polars for cruise, takeoff, and landing are shown below.

Figure 4-7 shows the drag polar for cruise. The lift coefficient for cruise was found to be 0.475 and the L/D_{max} was found to be 15.9. At the cruise conditions of 0.8M and 38,000 ft the L/D was found to be 14.2.

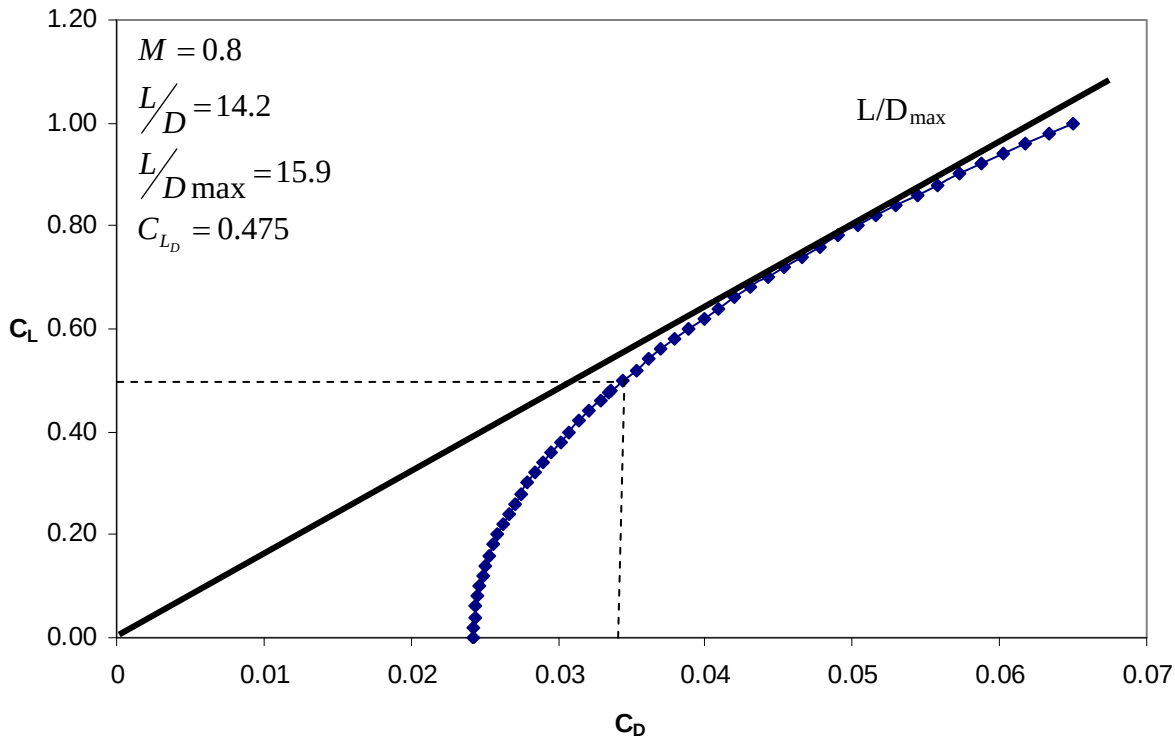

Figure 4-7. Drag Polar for Cruise

Figure 4-8 shows the drag polar for takeoff. At takeoff C_L=3. The lift coefficient was found based on C_{Lmax} = 3.6. The lift to drag ratio for takeoff was found to be 7.2.

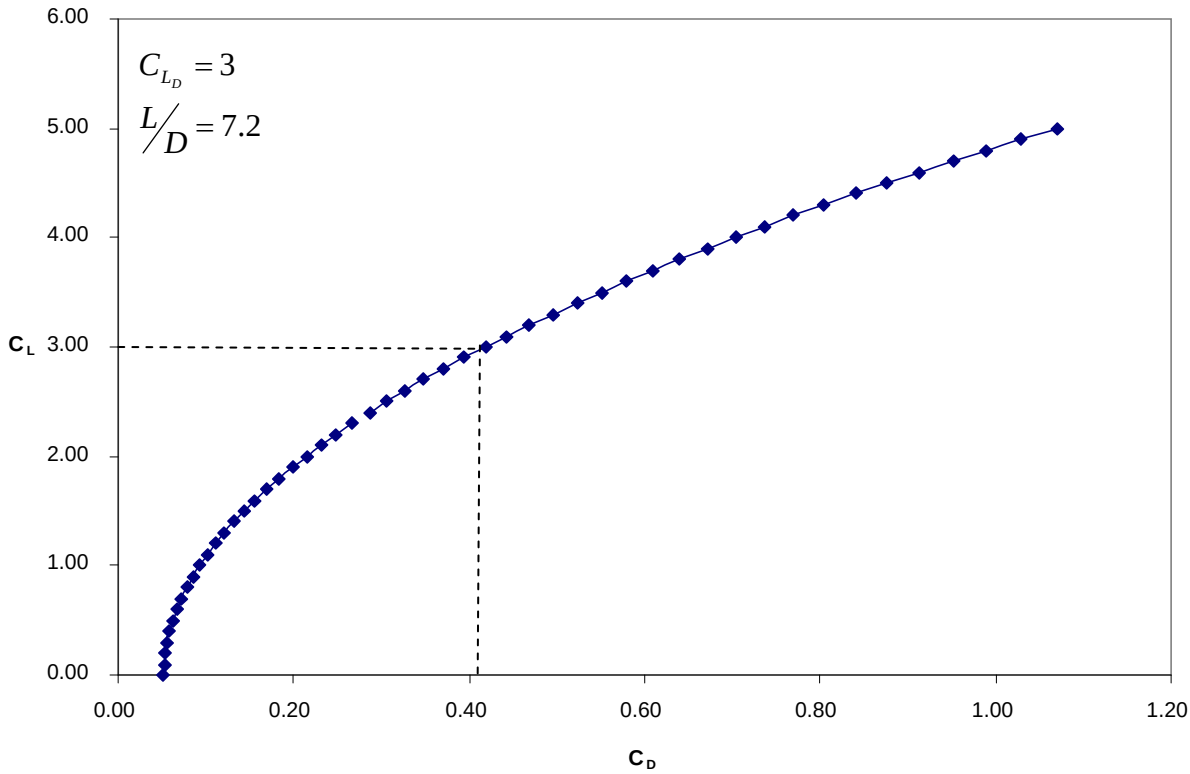

Figure 4-8. Drag Polar for Takeoff

Figure 4-9 shows the drag polar for landing. The C_L for landing was found to be 2.5 with a lift to drag ratio of 8.14.

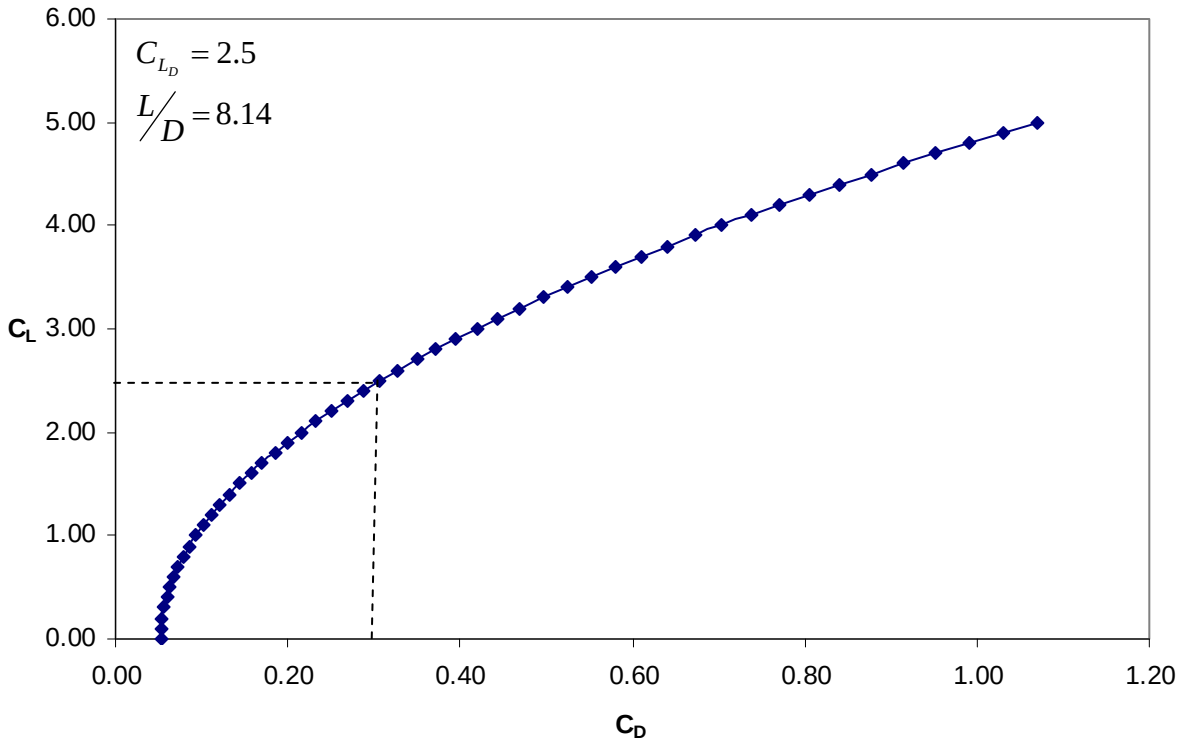

Figure 4-9. Drag Polar for Landing

5.0 Propulsion

The success of the Swingliner heavily depends on the propulsion system. The engines have to be able to create enough thrust for a short takeoff and be fuel efficient to save on fuel weight. The following section explains how the engines were selected, why the engines are mounted under the wing, and the purpose of the reverse thrust system.

The engine selection process started with analyzing the engine deck that the AIAA provided for us. The engine deck provided uninstalled engine data for a low bypass and high bypass engine. The first step in the analysis was generating installed engine data. The equation for percent thrust loss is noted below[7]:

$$Percent\ thrust\ loss = C_{bleed}\left(\frac{bleed\ mass\ flow}{engine\ mass\ flow}\right)\times 100$$

The installed engine data had a five percent decrease in thrust. After this was completed, the low bypass AIAA engine, high bypass AIAA engine and two others were compared in different areas. Some of the characteristics of the engines are in Table 5-1:

Table 5-1. Four Engine Characteristics Comparison

Engine	Max Thrust (lb_f)	Dry Weight (lb)	Max Diameter (in)	Bypass Ratio	Length (in)	Current Platforms
F117-PW-100[10]	40440	7100	84.5	5.90	146.8	C-17
CF6-80C2[11]	40000	9860	106.0	5.31	168.0	B-767
AIAA Low Bypass	41965	5388	65.6	2.00	100.7	-
AIAA High Bypass	42046	7993	82.7	6.00	129.0	-

Both AIAA engines produced about the same amount of thrust, but the low bypass engine was lighter, shorter, and had a smaller maximum diameter than the high bypass engine. Initially

this looked like the best choice; however, the low bypass engine required 1.24 times the fuel that the high bypass engine needs to complete the same mission. This was determined by running the mission analysis program. Therefore, the advantage that the low bypass engine had in weight, 2500 lbs per engine (totaling 10,000 lbs for four engines), was countered by the additional fuel of approximately 20,000 lbs. After this was discovered, it was clear that the low bypass engine no longer had any benefits and was abandoned.

The other engines examined were the CF6-80C2 and F117-PW-100. Overall, the CF6 was larger in size and weight than the high bypass engine without increased thrust; therefore it was abandoned as well. However, the F117 engine was very comparable to the high bypass engine provided by the AIAA. Therefore, both engines were used when designing the Swingliner because the AIAA engine lacks some information that was provided for the F117 engine. Initially, the four-engine design was analyzed without being scaled; however it was clear that there was an abundance of thrust. The engines were then scaled down by 25%. This reduction will benefit the Swingliner by reducing engine weight, fuel weight and structural weight while still having four engines for the safety of an engine out. A cut out view of the F117-PW-100 engine is shown in Fig. 5-1.

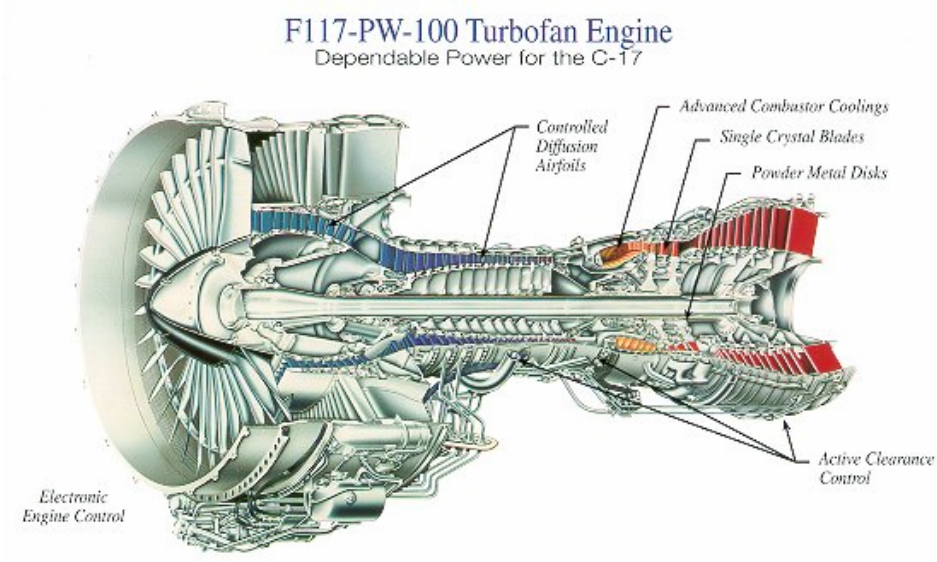

Figure 5-1. Cut-out View of F117-PW-100 Engine[12]

After adjusting the engine deck to the new scaled values, the engines were analyzed to see if there would be enough thrust available to reach the cruise velocity of 0.8 mach. Two graphs were plotted, Figs. 5-2 and 5-3, to help see the effect of altitude and Mach number on the thrust values and thrust specific fuel consumption (TSFC).

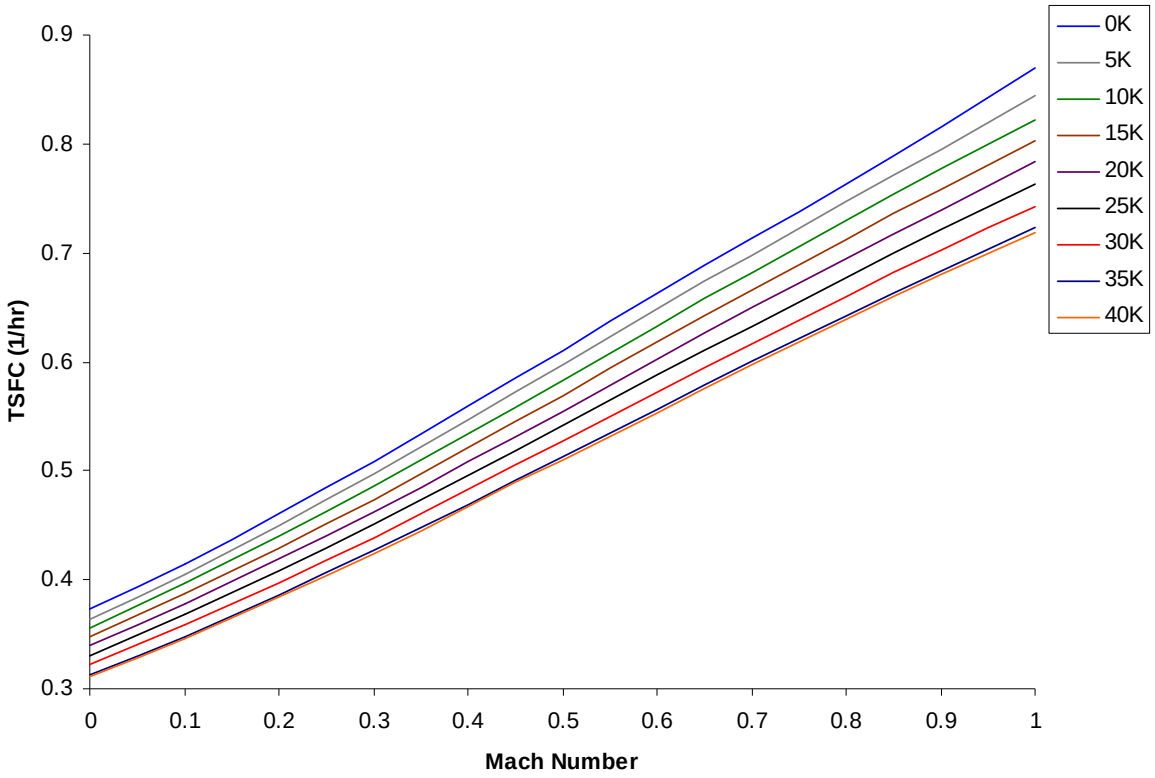

Figure 5-2. Installed Thrust vs. Mach Number at Maximum Power (Altitude in ft)

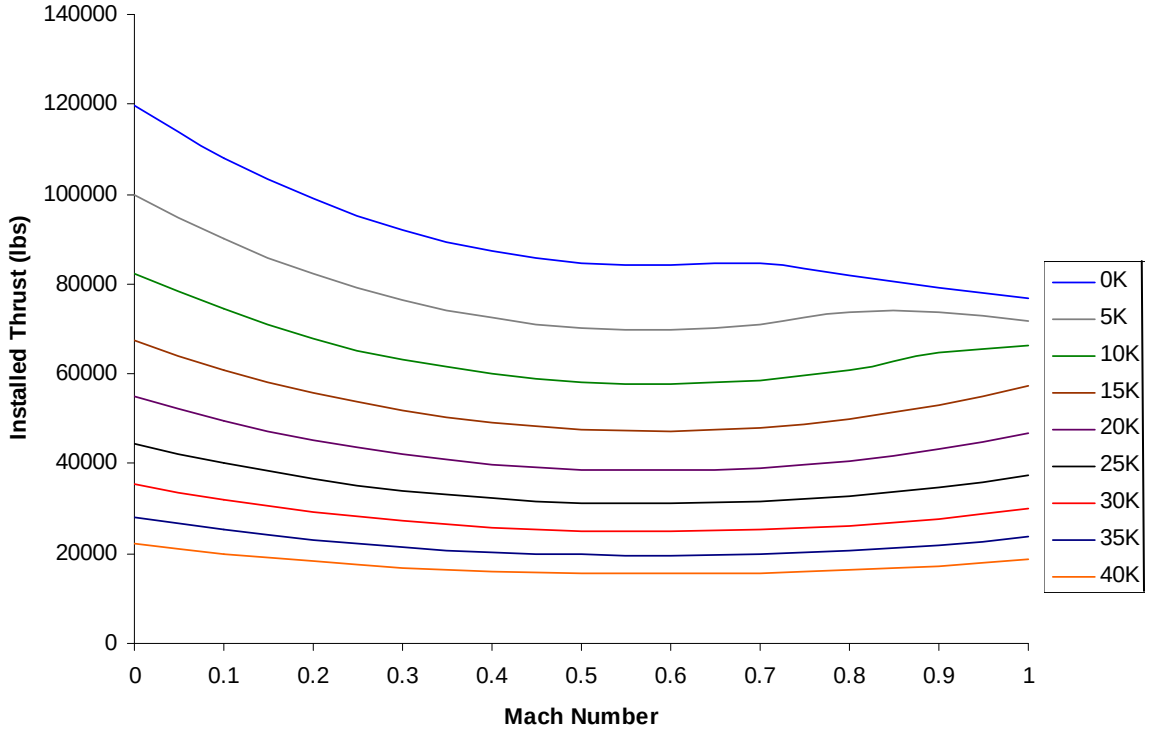

Figure 5-3. Installed TSFC vs. Mach Number at Maximum Power (Altitude in ft)

Figure 5-2 shows that at our cruise altitude of 38,000 ft there will be approximately 20,000 lbs of available thrust to counter the expected 14,750 lbs of drag. This shows that the Swingliner will be able to cruise at 0.8 mach and possibly faster.

5.1 Reverse Thrust System

By implementing a reverse thrust system into the Swingliner, it will be capable of operations that most transport aircraft are not. The reverse thrust system allows the Swingliner to perform tactical descents, the ability to reverse on level surfaces, 180° turns without ground crew or equipment, unimpeded ramp loading (because the air is directed up and forward of aircraft), and continuous operation due to the fact that the air is not re-ingested. The reverse thrust system also helps stop the aircraft during the ground roll after touchdown. The Swingliner is also able to operate at commercial airports because it meets FAA Stage 3 noise requirements[13].

The reverse thrust system that has been implemented on the Swingliner is a cascade type. A cascade system is built into the side of the engine nacelle and consists of a series of vanes that turn the air in the opposite direction. The cascade system is covered by sliding doors during normal engine operation. When the reverse thrust system is engaged, the doors open and the air flow through the engine is blocked, turned outward and blown forward. This causes the thrust to be turned into drag or reversed thrust[14]. We chose the cascade type because it is lighter and had less maintenance than a clam shell reverse thrust system. A diagram of the cascade system is shown in Fig. 5-4.

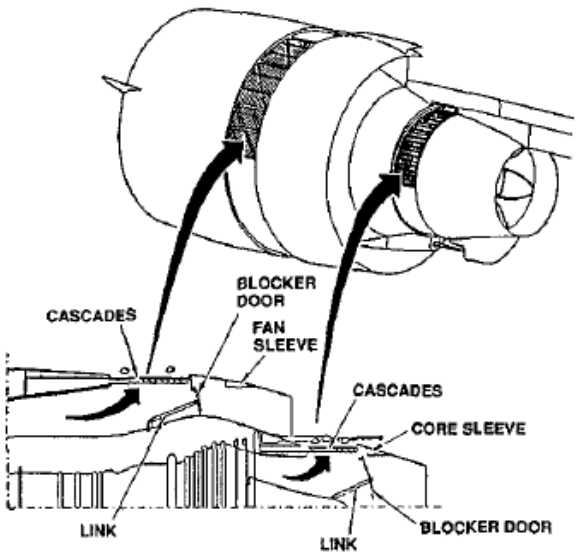

Figure 5-4. Cascade Reverse Thrust System Diagram[15]

5.2 Engine Mounting and Maintenance.

The engines are mounted in pods under the wing in order to support the externally blown flaps system for high lift. The disadvantages of the engines being in pods are that there is an increase in drag and that they are more likely to suffer damage from foreign object debris. The advantages of podded engines is the intake of undisturbed air, short inlet duct, wing loading relief (less structure weight in the wing), ease of maintenance, and it being a vortex generator which keeps the flow attached to the wing[1].

In addition to those advantages, the AIAA engine deck stated that the high bypass engine would have to be pylon mounted. The placement of the engines are shown in Fig. 5-5 below.

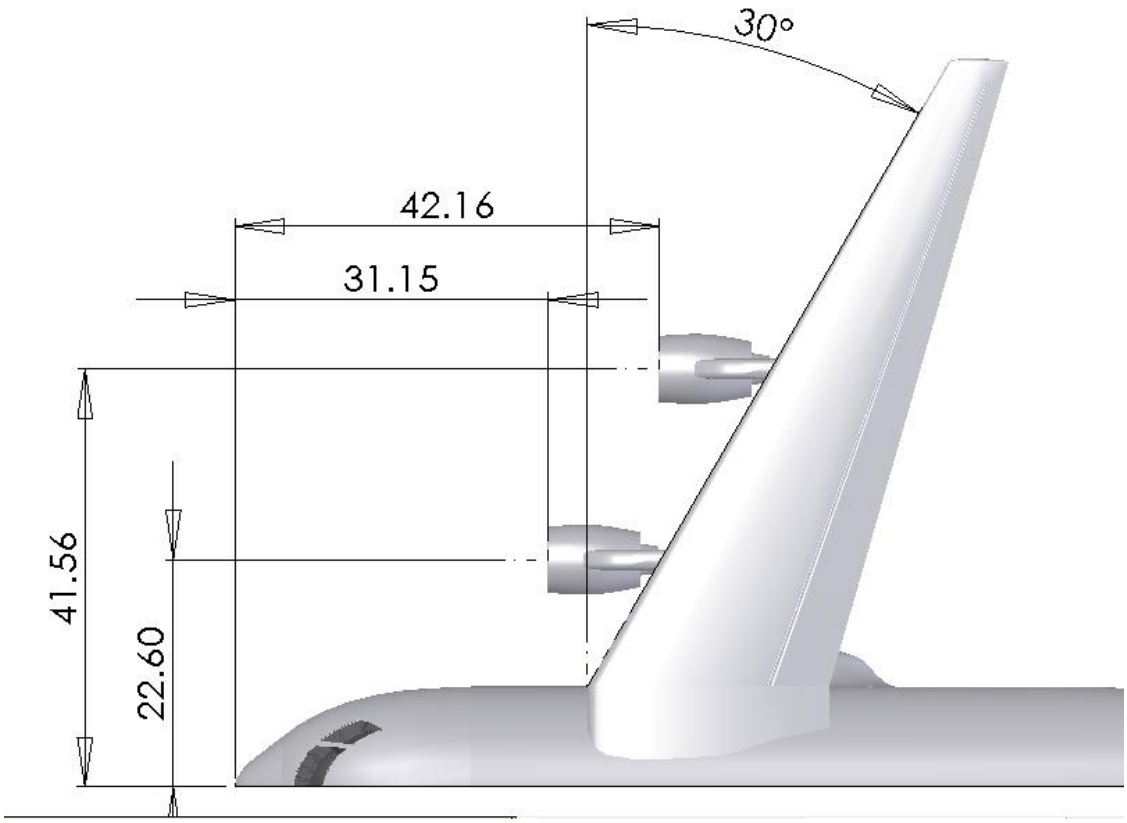

Figure 5-5. Engine Placement

The location of the engines was analyzed to allow the plane to be stable in the case of engine out. However, the engines were also placed far enough away from the fuselage to minimize ingestion of turbulent air.

6.0 Weights

6.1 Method

"The estimation of the weight of a conceptual aircraft is a critical part of the design process[1]". To estimate the total empty weight and the take-off gross weight of our aircraft, the weights estimate method in Raymer was used. This method consists of equations for different types of aircraft (fighter jets, general aviation, cargo transport) and the equations for the cargo transport were used because that is the type of aircraft being designed. There is an equation for the weight of each component of the aircraft, from the weight of the wing to as much detail as the weight of the air conditioning and the anti-ice system. These equations have several variables, most of them being very detailed dimensions of the conceptual aircraft. They also take into account such things as the number of engines, number of fuel tanks, volume of fuel, number of cargo doors, and details about the landing gear. These equations come from a database of as many current aircraft as possible and this method is used by several major airframe companies in conceptual design[1]. The weights are separated into four major groups: structures, propulsion, equipment, and useful load. The sum of the structures, propulsion, and equipment make up the total empty weight and adding the weight of the useful load (payload, fuel, and crew) to the total empty weight equals the take-off gross weight. The take-off gross weight is the weight of the aircraft and everything inside it at take-off for the design mission[1].

6.2 Calculations

A table of the weight of each component of the Swingliner using the method discussed in the previous section is shown in Fig. 6-1 below.

JTC-2 E				
Structures	Weight (lb)		**Equipment**	Weight (lb)
Wing	15,433		Flight controls	329
Horizontal tail	2,913		Instuments	544
Vertical tail	1,973		Hydraulics	1560
Fuselage	23,430		Electrical	1010
Landing gear	5,000		Avionics	1,000
Nacelle group	6,380		Furnishings	3,286
Total	**55,129**		Air conditioning	1,328
			Anti-ice	366
			Handling gear	55
			Handling system	1,500
			Total	**10,978**
Propulsion	Weight (lb)		**Total empty weight**	**88,912**
Engines	20,700			
Engine controls	148		**Useful load**	Weight (lb)
Starter	253		Crew	600
Fuel system	1704		Fuel	70,000
Total	**22,805**		Payload	60,000
			Total	**130,600**
			TOGW	**219,512**

Figure 6-1. JTC-2 E Swingliner Weight Components

Adding the structures, propulsion, and equipment together a total empty weight of around 88,912 lb. was found for the Swingliner. Adding the useful load to the total empty weight resulted in a take-off gross weight of about 220,000 lb.

6.3 Comparison

Bar graphs of the percentages of the structural empty weight of three aircraft are shown below. These charts were made to be able to easily compare our weights to those of other

similar, current aircraft to make sure our numbers were sensible. The first (Fig. 6-2) is our concept (the Swingliner) and the next two charts (Fig. 6-3, 6-4) are the percentages of two similar, current aircraft, the KC-135A and the C-141A[2].

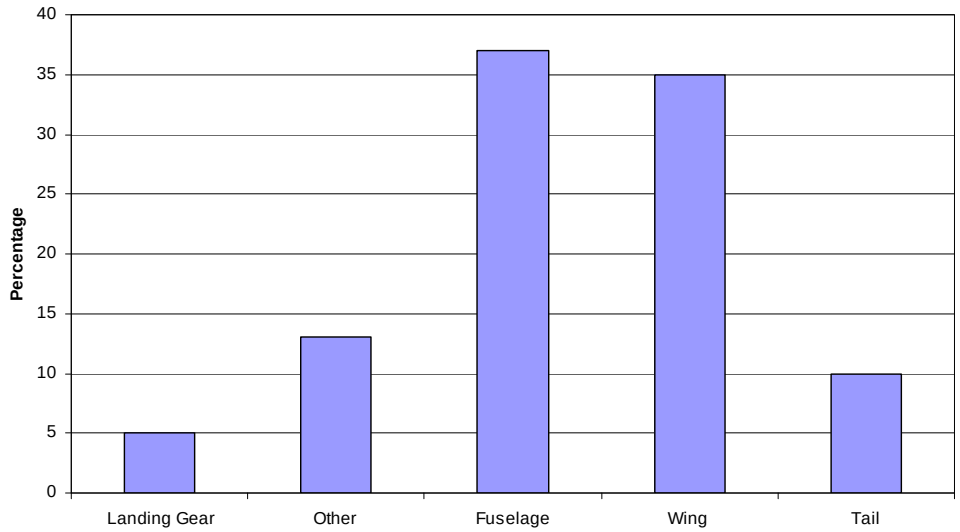

Figure 6-2. Line chart of the weights of the major components of the structural empty weight of the JTC-2E.

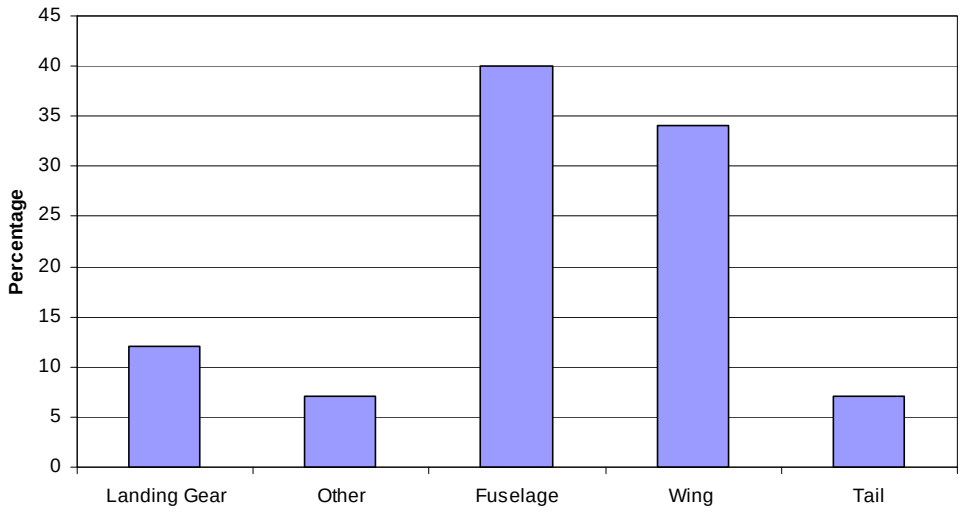

Figure 6-3. Percentages of the major components of the structural empty weight of the C-141A.

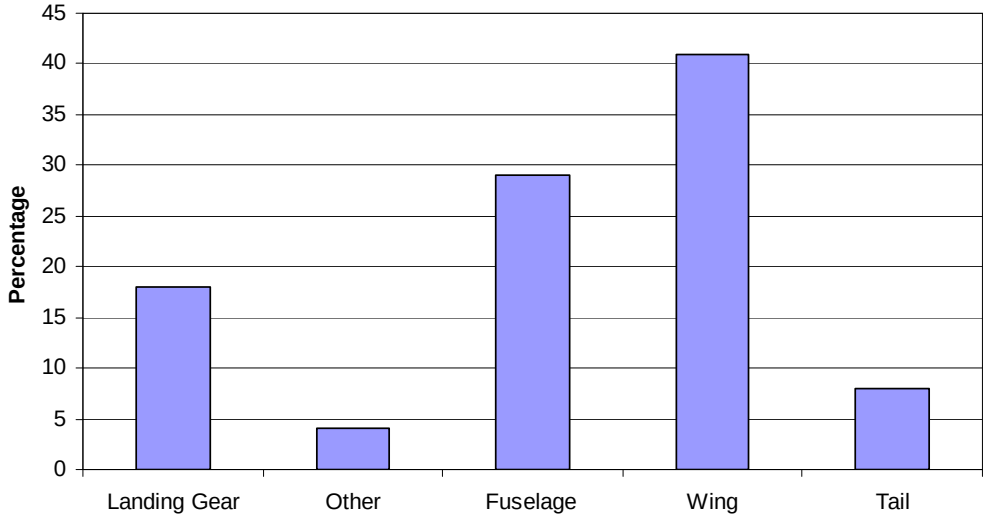

Figure 6-4. Percentages of the major components of the structural weight of the KC-135A.

6.4 Center of Gravity

To calculate a center of gravity the following equation was used:

$$\frac{\sum (W_i * x_i)}{\sum W_i}$$

Where W is the weight of each component of the aircraft and x is the distance the center of gravity of each component is from the front of the fuselage. Table 6-1 is a table of the weight of each component and its center of gravity measured from the nose of the aircraft:

Table 6-1. Calculation of the JTC-2E's Center of Gravity

Components	Weight (lbs.)	C.G. X (ft)
Wing	15,433	59.16
Horizontal tail	2,913	148.1
Vertical tail	1,973	136.5
Fuselage	23,430	50
Rear LG	4,000	55.37
Front LG	1,000	16.9
Nacelle group	6,380	39.5
Structures		
Engines	20,700	39.5
Engine controls	148	39.5
Starter	253	39.5
Fuel system	1,704	59.16
Propulsion		
Flight controls	329	11
Instruments	544	10
Hydraulics	1,560	65
Electrical	1,010	60
Avionics	1,000	11
Furnishings	3,286	11
Air conditioning	1,328	11
Anti-ice	366	59.16
Handling gear	55	80
Handling system	1,500	100
Equipment		
Payload	60,000	52
Fuel	70,000	55
Crew	600	12
Total TOGW	219,512	

In Fig. 6-5 below, is a chart that shows how the center of gravity is affected as fuel is burned and the payload is dropped. Figure 6-6 shows the center of gravity shift for the ferry mission.

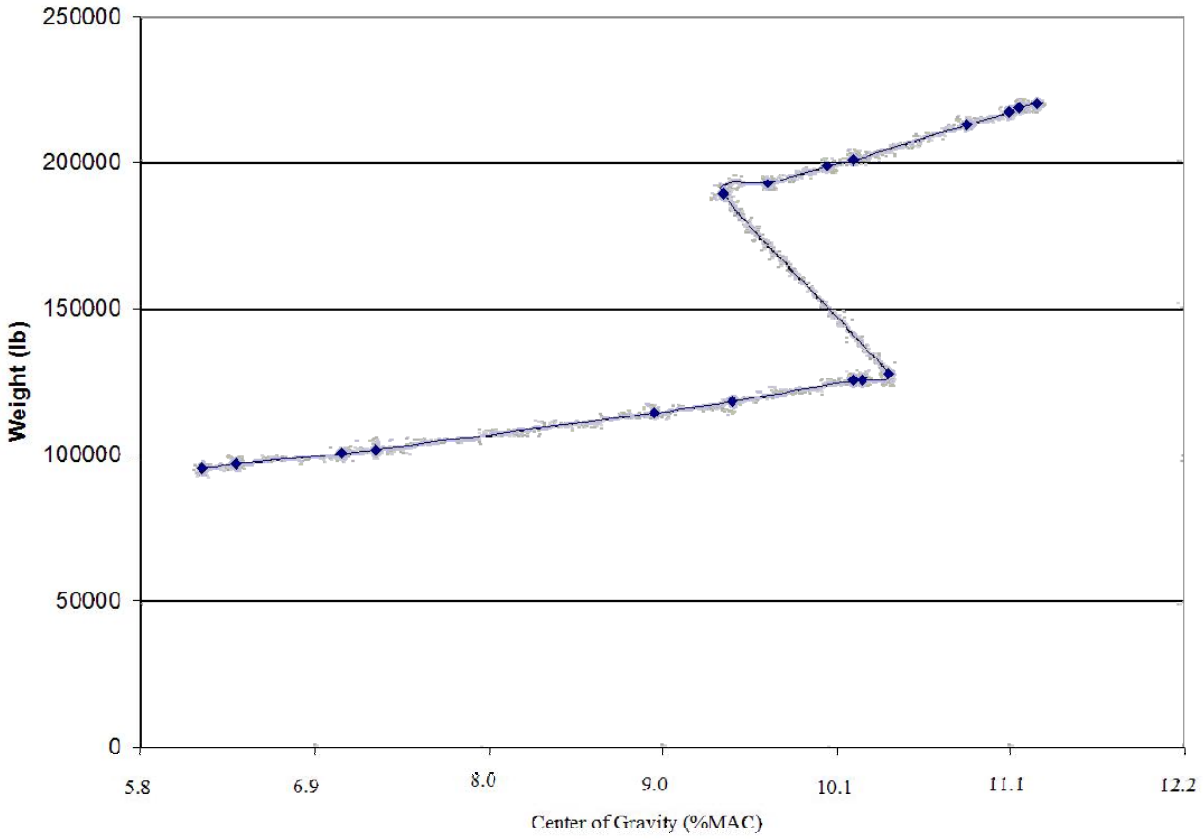

Figure 6-5. Weight vs. Center of Gravity for Primary Mission

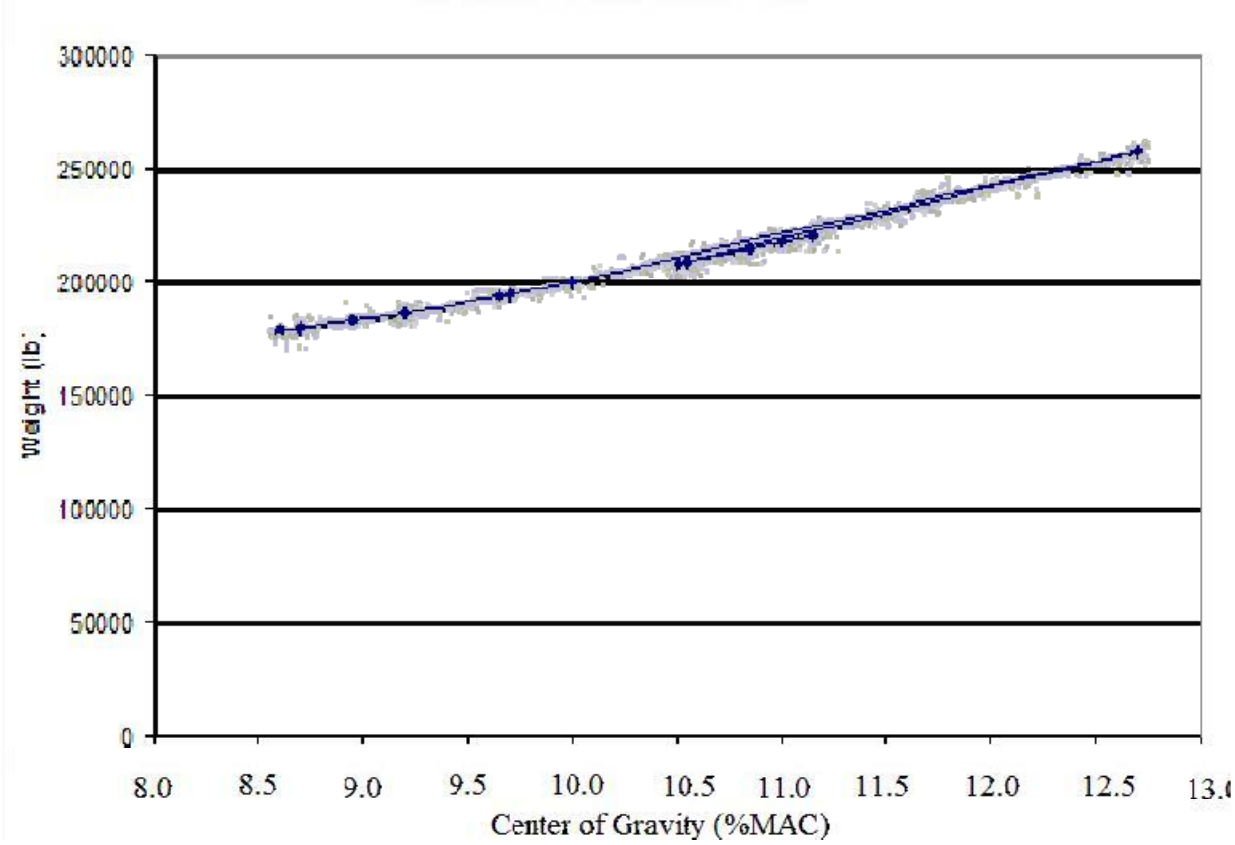

Figure 6-6. Weight vs. Center of Gravity for Ferry Mission

7.0 Stability and Control

The RFP does not directly state any stability requirements so MIL-F-8785C regulations serve as the limiting factor. MIL-F-8785C constrains the stability and controllability of an aircraft both in normal operation and with component failures. Since the Swingliner is designed for military use in austere locations it is likely that the aircraft will take damage either accidental or deliberately during its operation. Control analysis focused on this likelihood by looking at the worst-case single component failure and to minimize the probability of multi-component failure.

7.1 Stability

MIL-F-8785C lists specific requirements for dynamic stability in all phases of flight. Both longitudinal and lateral-directional stability had to be evaluated and the aircrafts control surfaces designed so as to meet these requirements. The RFP did not specify certain stability constraints which leaves open the option of a neutrally stable or even unstable aircraft with computerized controls to imitate stable flight. The controls section goes into detail as to why certain constraints were put on beyond the MIL-F-8785C and RFP requirements.

7.1.1 Longitudinal Stability

Table 7-1 below shows the requirements for longitudinal stability of a transport aircraft. These requirements can be easily met by simply ensuring the center of gravity for the aircraft is slightly ahead of the neutral point. Initially the static margin was constrained to be greater than zero[7].

Table 7-1. Longitudinal Stability Requirements

Category	Level 1		Level 2		JTC	
	Phugoid Damping	Short Period Damping	Phugoid Damping	Short Period Damping	Phugoid Damping	Short Period Damping
A	0.04	0.35-1.30	0	0.25-2.00	0.07	0.55
B	0.04	0.30-2.00	0	0.20-2.00	0.05	0.55
C	0.04	0.35-1.30	0	0.25-2.00	0.12	0.55

The horizontal tail was dimensioned initially using Raymer and then optimized using Tornado, a Matlab based vortex-lattice code. The horizontal tail was sized specifically for the takeoff condition. This is the point in which the tail has to exert the largest moment compared to any other flight condition and thus the limiting factor as to how small it can be[5]. The dimensions of the horizontal tail are listed in Table 7-2. The further forward the center of gravity was placed the larger a horizontal tail was required. For this reason a maximum static margin of 15% was put in place initially.

Table 7-2. Horizontal Tail Dimensions

Horizontal Tail	
C_r	14
C_t	4
b/2	36
Sweep C/4	19.5
Taper Ratio	0.28
C_{rudder}	C_{local}

In cruise the horizontal tail must be large enough to maintain constant pitch. Assuming, in a worst case scenario, that the pilot wanted to cruise at the maximum design C_L the tail had to be capable of generating a moment equal and opposite to that of the wing. Table 7-3 shows the

tail C_L's required to generate that moment. Note that the Tail C_L is negative, indicating a downward lift vector due to the positive stability of the aircraft.

Table 7-3. High Lift Trim

C.G. Location	Wing C_L	H-tail C_L	V-tail C_L	Bank angle (deg)
Aft-limit	3.8	-0.69	N/A	0
Aft-actual	3.8	-0.37	N/A	0
Fwd-limit	3.8	-0.74	N/A	0
Fwd-actual	3.8	-0.49	N/A	0

7.1.2 Lateral-Directional Stability

The damping and dutch roll requirements for a transport aircraft under MIL-SPEC-8785C are listed in Table 7-4 and the time-to-roll requirements can be found in Table 7-5. Both tables show the level one and level two requirements as well as the Swingliner's capabilities[6].

Table 7-4. Lateral-Directional Stability

	Category	A	B	C
Level 1	Dutch Roll Damping	0.4	0.19	0.08
	Dutch roll Frequency (rad/sec)	0.4	0.4	0.4
	Min (Damping* frequency)	0.35	0.15	0.1
Level 2	Dutch Roll Damping	0.02	0.02	0.02
	Dutch roll Frequency (rad/sec)	0.4	0.4	0.4
	Min (Damping* frequency)	0	0	0
JTC	Dutch Roll Damping	0.54	0.47	0.33
	Dutch roll Frequency (rad/sec)	0.67	0.54	0.51
	(Damping* frequency)	0.36	0.25	0.17

Table 7-5. Time to Achieve 30° Bank Angle Change Requirements (sec)

	Category		
Level	**A**	**B**	**C**
1	1.5	2.0	2.5
2	2.0	3.3	4.0
3	3.0	5.0	6.0
JTC	1.46	1.46	1.77

To meet the level 1 requirements for bank in Table 7-5 a combination of aileron and flap deflection is required for both category A and B flight phases. The flaps on the upward moving wing will deflect down proportional to the ailerons motion up to a maximum of ten degrees. The ailerons themselves are capable of thirty-five degrees of rotation. In takeoff or landing configuration with the flaps already extended the flaps on the downward moving wing will retract up to ten degrees instead. If the flaps are at a midway position then each side will move up to half the maximum ten degree deflection appropriate to the direction of bank. The flap motion will be controlled by an onboard computer.

The vertical tail's dimensions are shown in Table 7-6. A T-tail design was used to minimize the size of the vertical tail. This design can increase the overall effectiveness of the vertical tail by up to 10%.

Table 7-6. Vertical Tail Sizing

	Vertical Tail
C_r	20
C_t	17
b/2	25
Sweep C/4	30
Taper Ratio	0.85
C_{rudder}	$.3*C_{local}$

7.2 Control

The most probable and critical single component failure is an outboard engine loss during takeoff. This was one of the primary reasons the Swingliner was designed as a four engine aircraft. Having four smaller engines means less adverse yaw and thus less corrective force required should one of the engines fail. It also means that in cruise the thrust of the remaining three engines can be adjusted independently to counter the majority of the yawing moment while minimizing trim drag.

Tail sizes analysis was made on the most extreme flight conditions in which the aircraft is required to operate. These conditions include takeoff at maximum load with a full forward center of gravity, engine out in takeoff, and a landing with up to a 25 knot crosswind.

7.2.1 Take-Off

Generating the necessary lift to meet the short takeoff requirements is done by using a blown flap system. This creates the requirement that the flaps must extend behind all engines for maximum effect. The result is that the ailerons are forced further out on the wing which increases the moment that they can generate at higher speeds leading to the possibility of over-control. In order to minimize how far out the ailerons have to be placed a flaperon system has been implemented. The flaperon system allows the ailerons to function as flaps for takeoff and landing in addition to being used as ailerons in all flight conditions. This requires a computerized control mixer to analyze and adjust the aileron position based both on flap settings and stick movements normally associated with aileron motion. The flap system measures 30% of the local chord and extends for 67% of the wingspan. Due to structural considerations the ailerons also measure 30% of the local chord and extend from the end of the flaps to 95% of the wingspan.

The horizontal tail was sized to be able to generate sufficient pitching moment during takeoff. Using an all-moving horizontal tail allowed for a higher C_l for a given deflection which translates to a smaller deflection required to generate the same moment. This also simplifies the tails construction which both reduces the likelihood of malfunction as well as increasing the ease of maintenance. It does require a more robust vertical tail but the weight penalty is negated by the decreased size and surface area of the vertical tail.

7.2.2 Engine Out

The lateral-directional control requirements revolved primarily around a potential engine loss at takeoff. Survivability and controllability with the loss of an engine at any phase of flight over the entire C.G. envelope is required in Mil-F-8785C.

Initial analysis showed a C_l of 1.6 required on the vertical tail to overcome an outboard engine loss at takeoff with the aft-most C.G. limit. This would have necessitated an automated circulation control system to help generate the required lift on the vertical tail. The actual C.G. shift for all loading conditions is significantly smaller than the C.G. range initially allowed so the C.G. range was shortened to decrease this requirement. The aftmost C.G. limit was reduced from 25% MAC to 23.5% MAC decreasing the vertical tail C_l requirement to 1.12. The forward C.G. limit was also decreased to 22.2% MAC in order to decrease the lift required from the horizontal tail during an engine-out takeoff. These limits, as well as the expected operational C.G. range can be found in Table 7.7.

Table 7-7. C.G. Range and Limits

	C.G. (%MAC)
Forward Limit	22.21%
Payload and Fuel	22.73%
Fuel Only	22.86%
Empty	22.94%
Payload Only	23.43%
Aft Limit	23.52%

Required C_l, roll, and resulting yaw are tabulated in Table 7-8. Note that the main wing C_l has been decreased due to the loss of the engine-blowing for that section of flaps. The sideslip angles were found using Lateral/Directional Engine Out. Mil-Spec-8785C limits the bank angle to a maximum of five degrees away from the bad engine. It limits the force that the pilot can be required to input to maintain the sideslip but does not limit the sideslip angle itself.

Table 7-8. Engine Loss at Take-Off

C.G. Location	Wing C_l	H-tail C_l	V-tail C_l	Bank angle (deg)	Sideslip angle (deg)
Aft-limit	2.6	0.34	1.12	5	11.31
Aft-actual	2.6	0.36	1.11	5	11.31
Fwd-limit	2.6	0.61	1.08	5	11.31
Fwd-actual	2.6	0.51	1.09	5	11.31

7.3 Control System

Fly-by-wire control systems are commonly used in large aircraft similar to the one outlined in this proposal. These systems eliminate the bulk, weight, and maintenance costs and time found in mechanical or hydro-mechanical systems. They also permit for computerized control of most systems. Add in FADEC (Full Authority Digital Engine Control) and the

computer can operate all parts necessary to attain and maintain any flight condition within the flight envelope. The primary flaw of fly-by-wire systems is there susceptibility to electromagnetic interference. While this may be a rare occurrence it is enough to cause consideration of other options in the nuclear era. Fly-by-optics proved the obvious answer to this problem. This system provides all the same benefits of fly-by-wire with the added safety of immunity to electromagnetics as well as a faster transmission rate. The hardware and controllers all work identically with only the transmission wires themselves requiring being changed. For this reason fly-by-optics is the logical choice.

The largest fault of any system which does not have a direct link between the pilot and the actuator is that the pilot has no tactile sense of the actuators position or the aerodynamic force on it. The flight control will be attached to an electronic actuator which will apply a force back on the controller to give the pilot an artificial feel. Additionally a stick shaker and stick pusher will be employed to help prevent accidental stall. Stick shakers cause the controls to vibrate when the aircraft approaches stall as a warning and stick pushers actually nudge the controls to attempt to bring the nose down and prevent the stall. In the event of malfunction all of these systems can be disabled by the pilot or automatically disabled by the computer if it detects the problem first. Due to the non-critical nature of these systems redundancy will not be used to minimize weight and space requirements.

Control surface actuation will be accomplished through self-contained hydraulic systems. The hydraulic system is a completely self-enclosed hydraulic actuator, pump, and fluid reservoir for each control surface. In locations where multiple hydraulic systems are in close proximity the actuators themselves will be linked together to provide a redundant control. Each hydraulic system will independently control its own actuator while the onboard computer monitors the

status of all systems. Should one part of a linked system malfunction the computer will be able to use the other system to provide control to that actuator. This will result in an increased response time of one or both of the actuators but it will provide response where otherwise there would be none. The primary place that this linking will come into play is the tail section where both the vertical and horizontal tail will have there actuators and hydraulic systems in very close proximity to one another. The critical nature of these control surfaces combined with the hazardous duties the Swingliner was designed for makes such redundancy an absolute necessity.

8.0 Structure

8.1 Structural Requirements

Structural design of the aircraft is necessary to ensure that no structural components will fail under the limit load condition. A V-n diagram is used to define the flight envelope of the Swingliner and to analyze the aircraft's flight performance and gust conditions stated by FAR 25 regulations. Structural damage will occur when the aircraft is operated beyond the structural limits as shown in Fig. 8-1.

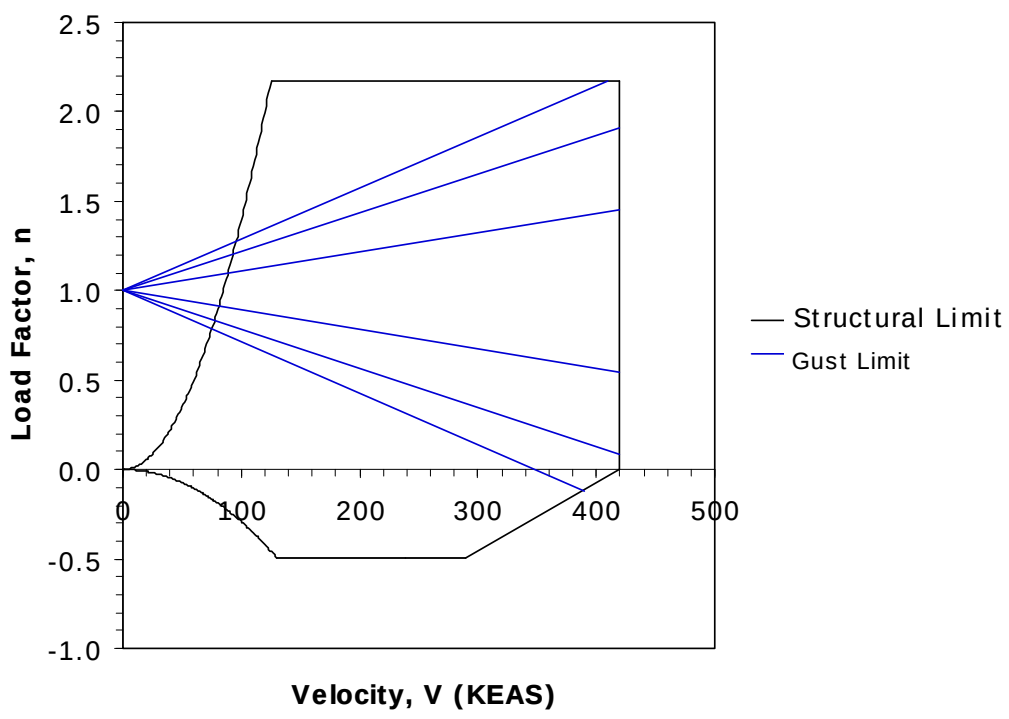

Figure 8-1. V-n Diagram at Cruise Conditions

Gusts on the aircraft while in flight cause additional loads on the aircraft. These loads result in additional constraints on the V-n diagram. Figure 8-1 shows that a fairly strong gust will not cause structural damage during cruise, which accounts for the majority of the mission.

8.2 Layout

The structural layout of the Swingliner is shown in Foldout 3. There are 13 bulkheads spaced along the length of the fuselage. These bulkheads are placed in locations of high loading for added support.

The wing is constructed with two spars located at 16% and 65% chord. Wing ribs are placed evenly along the wingspan. Ribs located at the engine locations are wider than the others. The wing is connected to the fuselage of the aircraft through a wing box, which also contains two spars and evenly spaced ribs. The structural layout of the horizontal and vertical tails is similar to the wing structural layout: constructed with two spars and evenly spaced ribs.

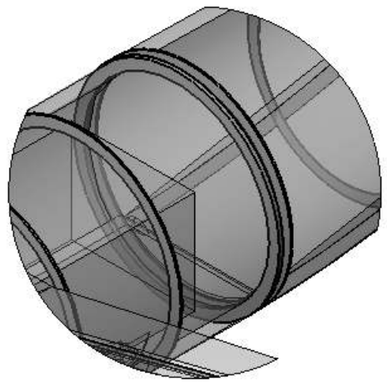

DETAIL A
SCALE 1 : 125

DETAIL C
SCALE 1 : 125

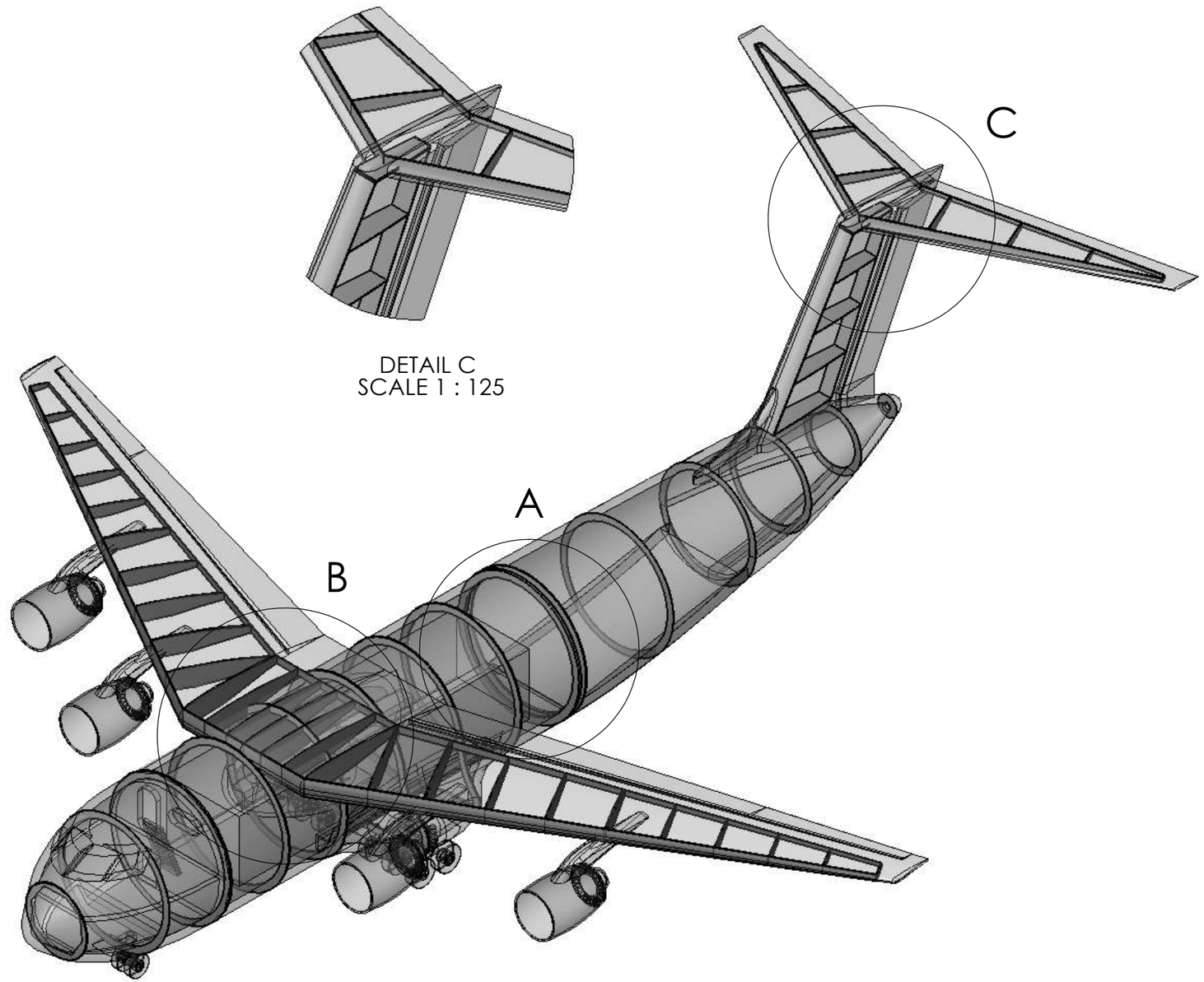

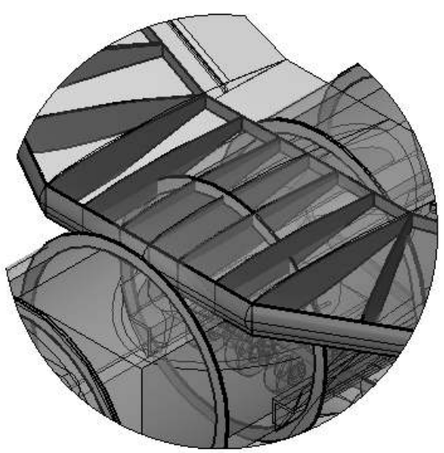

DETAIL B
SCALE 1 : 125

UNLESS OTHERWISE SPECIFIED:		NAME	DATE	INITECH AIRCRAFT CORP.
DIMENSIONS ARE IN FEET	DRAWN	NF	5/03/07	TITLE: JTC-2E SWINGLINER STRUCTURAL LAYOUT
	CHECKED	GC	5/03/07	
	ENG APPR.			
	MFG APPR.			
	Q.A.			
	COMMENTS:			SIZE B / DWG. NO. / REV
				SHEET 1 OF 1

8.3 Materials

Material selection directly affects the overall cost and weight of the aircraft, which in turns affects its performance capabilities. Additional weight increases fuel consumption, which decreases payload capacity due to additional fuel tanks. In the end, it is desirable to create an optimum, lightweight and low cost structure.

Next generation aircrafts will experience new capabilities due to the advancements in materials. Current use of composite materials is for increasing structural strength and reducing structural weight. This allows the aircraft to be lighter while still meeting the specifications. The high stiffness of composites increases its life-cycle, which reduces maintenance costs due to larger intervals between maintenance checks.

Table 8-1. Stiffness-to-Weight Ratio for Selected Materials[7]

Material	$\frac{E}{\rho g}$ (10^6 in)
Al 2024	107
Aircraft Steel	108
Ti-6Al-4V	100
Aramid	227

Additional advantages for using composites occur during the manufacturing process of the aircraft itself. Composite aircraft parts are created through molds. This production process allows quicker assembly of the aircraft, which significantly reduces labor costs with large production orders.

The main disadvantage for composite use is the relative cost of the material itself. Composites, unlike aluminum, are not found in abundance in the Earth. These materials must be manufactured and are more expensive because of this. This difference alone allows the cost of

aluminum to come at a few dollars per pound. Material cost comparisons of several materials are shown in Table 8-2.

Table 8-2. Material Cost per Pound for Selected Materials[16]

Material	Cost ($/lb)
Al 2024 T3	$4 - $5
4340 Steel	$0.19
Ti-5Al-4V	$25 - $59
Aramid	$14

Despite the high cost of composites, the benefits outweigh the disadvantages. Various combinations of metals and composites will be used to construct the aircraft. Titanium will be used to support the use of an externally blown flap system. Composites will be used wherever possible to decrease its overall weight.

8.4 Landing Gear

The Swingliner is configured with a tricycle multi-bogey landing gear arrangement. The primary factor that influences the tire size of the main wheels is the ramp angle relative to the ground. A smaller angle is preferable, which requires a short fuselage-to-ground distance and results in a smaller diameter. For these reasons, 12 wheels are used in the main landing gear. There are two struts that share six wheels located on either side of the fuselage. A single strut attached with two nose wheels is located under the cockpit of the Swingliner. Figure 8-2 depicts the layout of the landing gear with respect to the centerline of the aircraft.

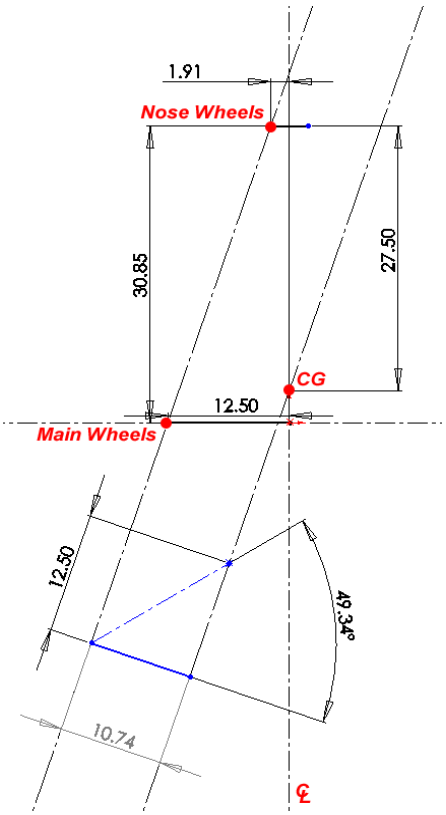

Figure 8-2. Top-View of Landing Gear Layout

Mission requirements states that the aircraft will be landing on unimproved landing conditions, which increases both the nose and main wheel diameters under ideal conditions.[7] The tires used for the main landing gear are each 46x16 in with a ply rating of 28. The nose landing gear uses two 39x13 in with a ply rating of 16.[17]

Retraction of the main landing gear will be into separate gear pods located in the blisters on either side of the fuselage.

9.0 Systems

9.1 Electrical System

The primary electrical system is provided by 75/90-kVA, oil-cooled, integrated-drive generators in each of the four engines. Each generator provides 115/200-volt, three-phase, 400-Hz AC power. The generators are connected in a split parallel bus configuration to provide redundancy if one or more of the engines is damaged. The generators also supply the 28-volt DC power system via four 200-ampere transformer rectifiers.

The secondary electrical system will be provided by a Hamilton Sundstrand APS-2000 APU while on the ground providing 60 kVA. This will allowed the pilots to start the engines without ground carts and power and provide power for ground refueling. The APU is also available for emergency power as a redundancy system to the generators in the engines. The APU can operate in flight at altitudes below 37,000 ft[18]. The APU is started by a Ni-Cad battery charge systems which is also available for emergency power to the controls system. The cargo compartment is supplied with 10 power outlets ranging from 60 Hz ac, 400 Hz ac and 28 volt dc. A basic schematic of the electrical power distribution is described in Figure 9-1.

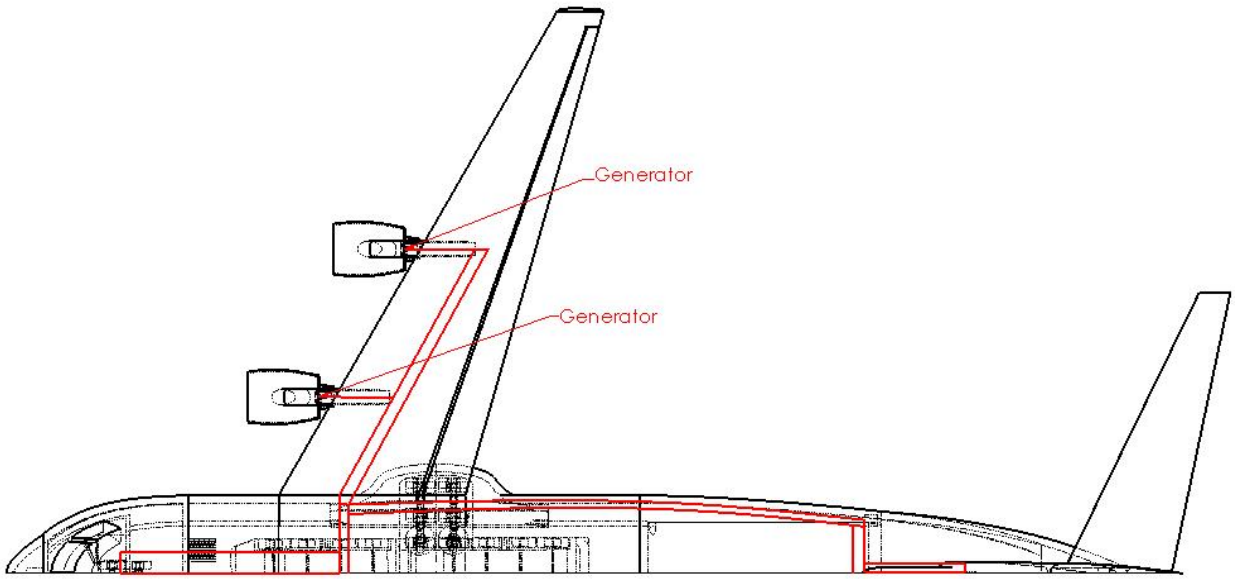

Figure 9-1. Schematic of Electrical System in the Aircraft

9.2 Environmental System

The environmental system in the aircraft controls the fuselage pressurization, avionics cooling, oxygen system, and onboard inert gas generation system (OBIGGS) system. The fuselage is pressurized in both the cockpit and cargo bay at approximately 8,000 ft cabin altitude when flying below 37,000 ft.[15] The system is driven by bleed air from each engine which is sized for one air-conditioning unit and the anti-icing system for both its cowl and one wing. This provides a redundancy in case of engine failure. The aircraft carries two air-condition units that are used for cockpit and cargo bay temperature regulation as well as cooling air to all avionics and electrical equipment while on the ground and flying at low altitudes. While at high altitudes where the outside temperature is much cooler, the air for the avionics and electrical equipment is cooled using skin heat exchanger. The cockpit oxygen system is supplied by a 25 liter converter while the cargo compartment oxygen system is supplied by a 75 liter converter. The OBIGGS

system is used to keep vapors in the fuel tanks inert by delivering nitrogen-enriched air maintaining a pressure of 0.5 psi in the tanks.

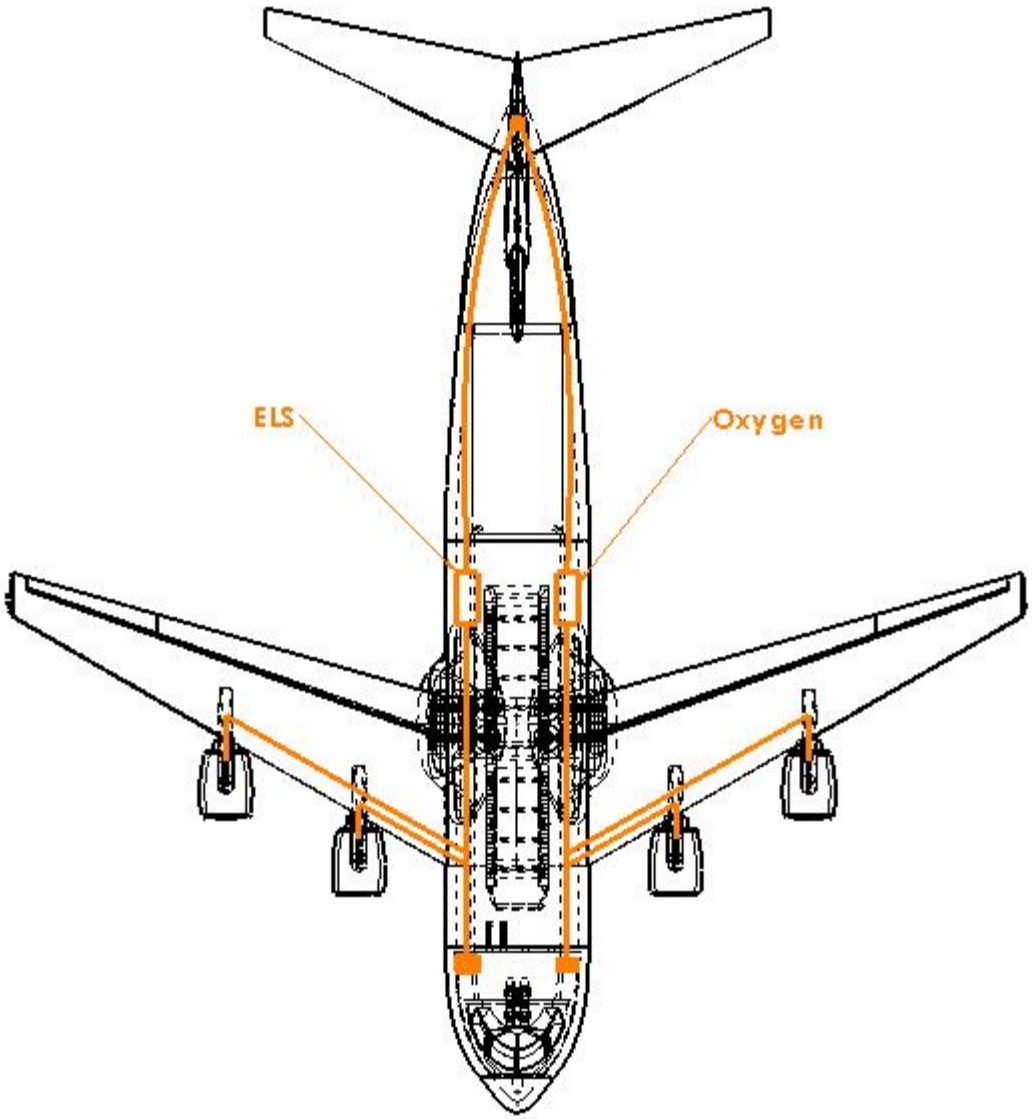

Figure 9-2. Schematic of Environmental Control System in the Aircraft

9.3 Hydraulic Power System

The hydraulic system in this aircraft is used to move the control surfaces, the high-lift system flaps and landing gear. Each engine has two pumps plus an electrical motor-driven pump (for redundancy) that controls a 4,000 psi hydraulic system. Only one system needs to be

working to complete a safe landing. The hydraulic system is installed using memory metal fittings that allow for reduction in maintenance.

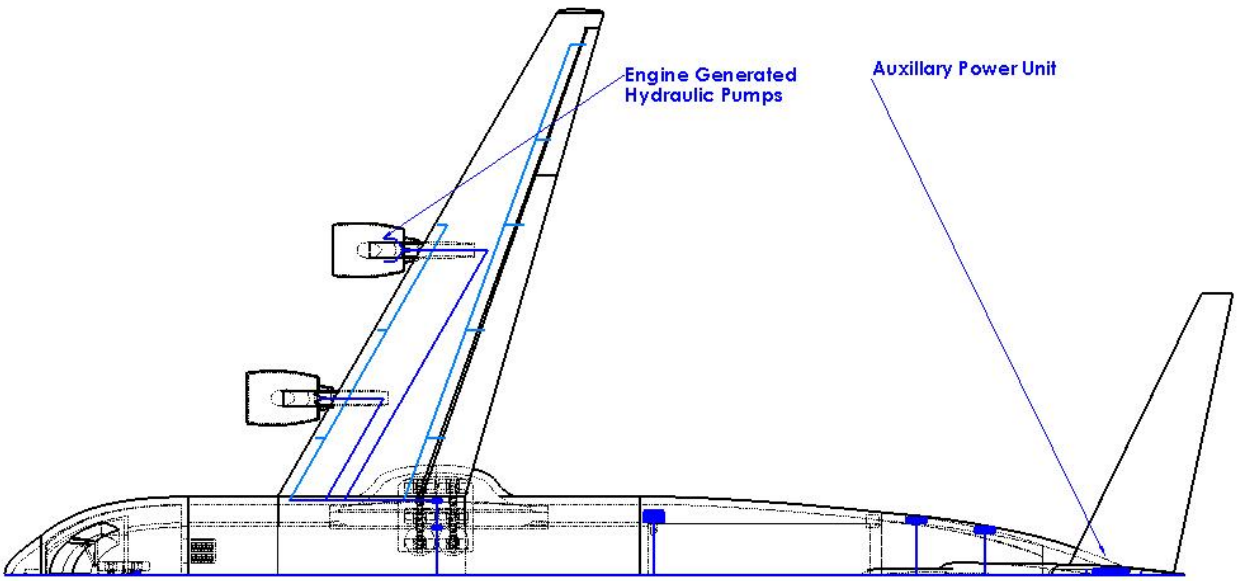

Figure 9-3. Schematic of Hydraulic System in the Aircraft

9.4 Fuel System

The fuel necessary to complete the primary mission stated in the RFP is 70,000 lbs as discussed earlier. Therefore, to make the aircraft competitive in the market, it was necessary to be able to carry at least this much with out completing an in-flight refuel. The aircraft is currently able to carry 82,000 lbs of fuel in the wings, and also has an expansion tank in the tail for hot temperature days. This expansion tank also allows for the pilot to control the C.G. location of the aircraft by transferring fuel to the tail tank.

The aircraft is integrated with an in-flight refueling port that is located on top of the fuselage just behind the cockpit windows. This is a critical system for long ferry missions where the aircraft is unable to carry enough fuel and prevents the aircraft from landing to refuel. There is also a fuel port in the cargo bay of the aircraft which allows for part of the payload to be an

extra fuel tank. This is only beneficial when the aircraft is not transporting large amounts of cargo.

9.5. Avionics

The Swingliner is fitted with the latest state of the art avionics equipment and systems. The mission computer, the Northrop Grumman Generation II Avionics Mission Management Computer[21], is well suited for the Swingliner. It has the latest components in computing such as high-speed PCI-x and gigabit Ethernet. The computer is based on a modular design which allows it to be upgraded easily.

For communications, the Swingliner is able to receive and broadcast UHF, HF, VHF, AM and FM transmissions. The PAE 3000DV2 VHF/UHF Defense Transceiver[22] is designed for military air communications. For HF transmissions, we have decided that Rockwell Collins AN/ARC-220 Advance High Frequency Aircraft Communications System[23] would be best suited for the task. This system is the standard HF radio of U.S Army aviation. To help friendly forces identify the Swingliner on radar, included in it is the Northrop Grumman AN/APX-121(V) Mode S Mark XII IFF Transponder[24]. This transponder meets all Mode S and Mode 5 requirements and is durable and reliable. To provide crew to crew communication, the C-AT Aircraft Wireless Intercom System[25] is used. This wireless intercom allows crewmembers to easily communicate with each other while being hands and cord free so they can easily perform other tasks.

For navigational equipment, the Swingliner is equipped with the Northrop Grumman LN-100R Embedded INS/GPS[26]. This equipment provides both inertial and GPS navigational data. Other additional navigational equipment that is included is the AN/ARN-147V

VOR/ILS/GS/MB Receiver System. This is the standard VOR/ILS receiver for the U.S. Air Force.

Since the Swingliner will be operating in an austere environment and possibly landing in hostile conditions, survivability measures have been taken. This aircraft is rather large and therefore vulnerable to enemy fire. To maximize survivability in a hostile environment, several defensive systems have been integrated into its design. The Northrop Grumman Radar Warning Receiver/Electronic Warfare Management System[27] can detect and alert the crew of radar threats both visually and audibly. Multiple sensors are placed along the peripherals of the aircraft to provide 360° of protection. The system can also be set to automatically jam radar and missile threats and deploy countermeasures. In addition to the radar warning receiver/Electronic Warfare Management system, the Swingliner is equipped with a Missile Warning System (MWS). The Northrop Grumman AN/AAR-54(V) MWS[28] detects ultraviolet energy from incoming missiles and alerts the crew. The MWS has also been interfaced with the countermeasure system to deploy countermeasures automatically, therefore increasing survivability of the Swingliner.

There are several management systems produced by Honeywell that have also been integrated into the Swingliner. These systems, Vehicle Management System, Tactical Management System, Mission Management System, and Flight Management Systems allow a variety of different systems to communicate with each other when it might otherwise not be possible[19].

Since the Swingliner will have to land on unimproved airstrips, lighting of the airstrip might be minimal or inadequate. To counter this obstacle, it is equipped with FLIR Systems' Thermovision EVS 1000[29]. This thermal imaging camera is able to see through poor visibility

conditions such as darkness, rain, haze, snow, smoke, and display it on any one of the displays in the cockpit, providing the pilots a clear view of the runway in even the worst weather conditions.

Other systems that have been integrated are the Northrop Grumman terrain-following radar which is currently being used in the C-130. In addition to the terrain-following radar, the Swingliner is also equipped with the Rockwell Collins FMR-200x Multimode Weather Radar[30]. Finally, to support the crew at high altitudes, the OC1165 High Pressure Oxygen Concentration System will provide oxygen to the aircrew during the mission.

9.6 Crew Station

The cockpit for this aircraft, based on current technological advancements, is what is commonly known as a glass cockpit. These advances allow for the pilots to select what is to be displayed on each of the three screens in the cockpit. This ability to customize the displays creates a set up that will be more comfortable for pilots. The Swingliner employs side sticks for the controls. This provides a clear view of the instruments and allows for a more relaxed flying condition for the pilots.

In case of loss of the electronic flight displays there are an array of backup analog displays located beneath the glass displays. To the outside of the displays there is an air vent so that the pilot and copilot can receive some air conditioning during flight. The cockpit also includes a third seat, located near the back of the cockpit, for the crew chief.

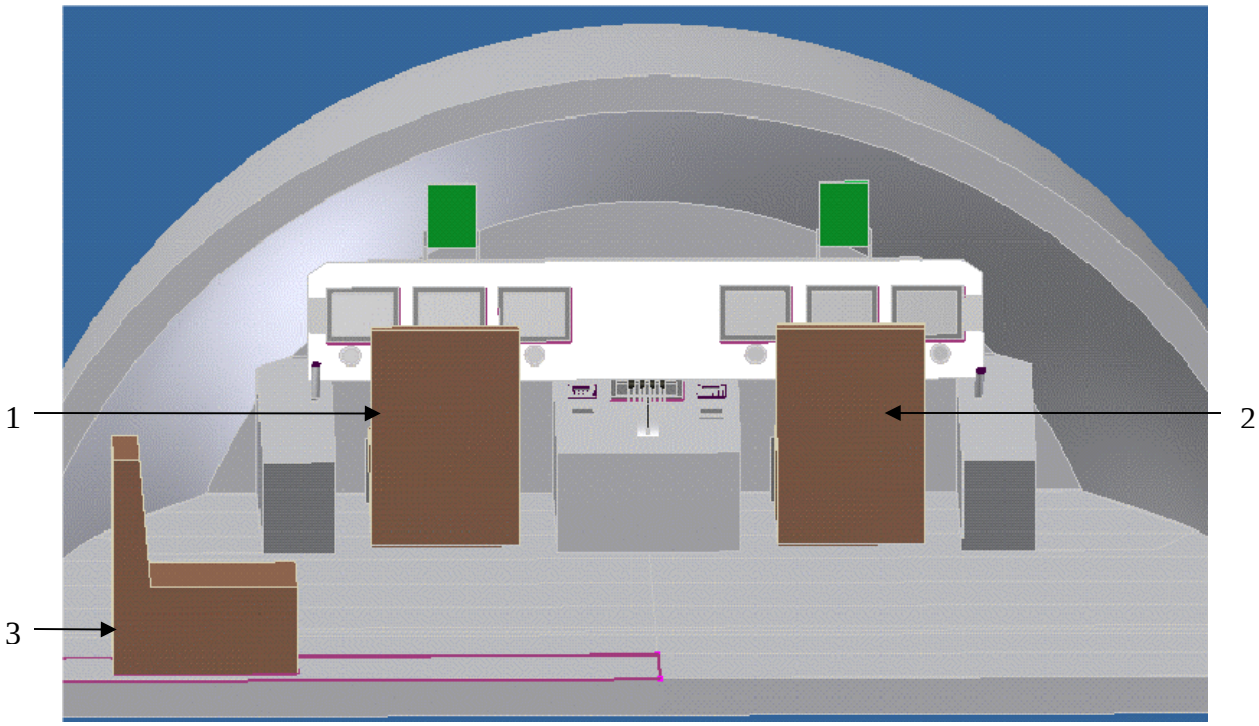

1: Pilot's seat
2: Copilot's seat
3: Crew chief's seat

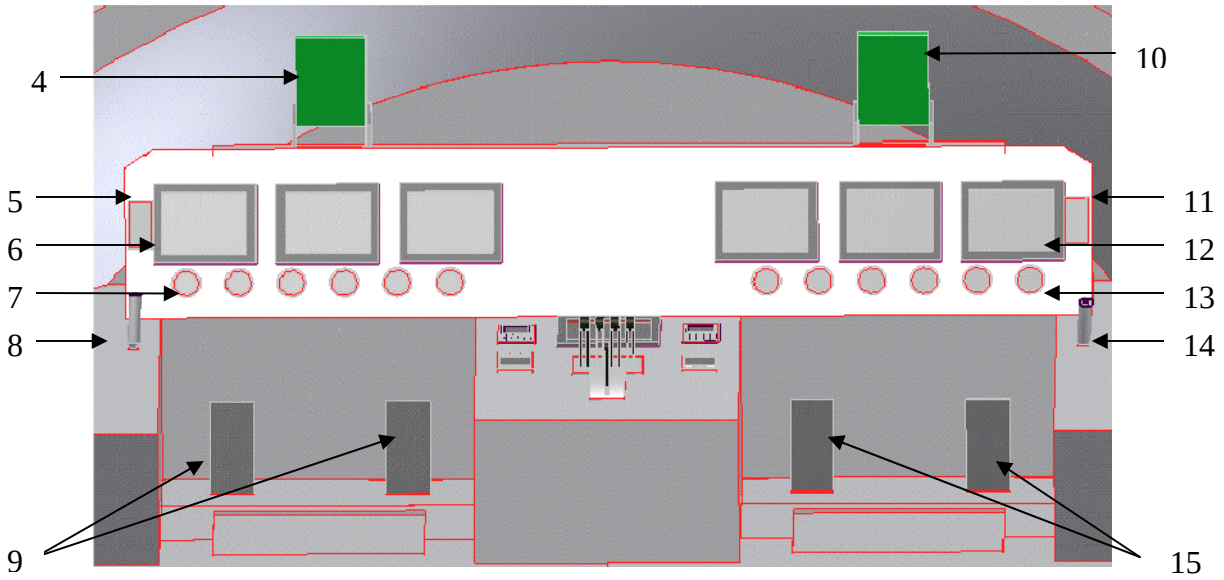

4: Pilot's HUD
5: Pilot's air vent
6: Pilot's displays
7: Pilot's back up displays
8: Pilot's stick
9: Pilot's rudder pedals

10: Copilot's HUD
11: Copilot's air vent
12: Copilot's displays
13: Copilot's back up displays
14: Copilot's stick
15: Copilot's rudder pedals

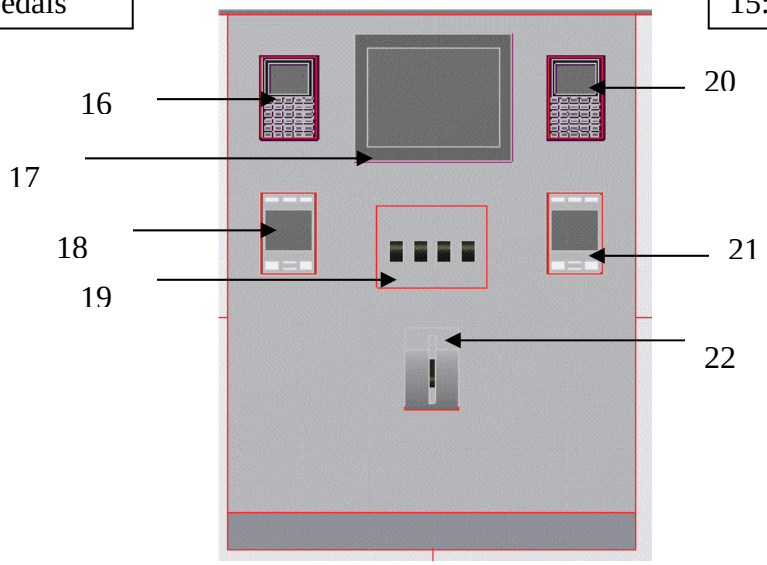

16: Pilot's mission computer
17: Engine display
18: Pilot's display selector
19: Throttles
20: Copilot's mission computer
21: Copilot's display selector

Figure 9-4. Crew Station Layout

10.0 Cost

Cost was not a driving factor when designing this aircraft, however, it was taken into consideration in order to have a competitive proposal. The RFP stated the need for flyaway cost and life cycle cost estimates for production runs of 150, 500, 1500 aircraft. Estimations for the flyaway cost and life cycle cost were analyzed using two different sources. The process and equations were taken from "Aircraft Design: A Conceptual Approach" 3rd edition by Raymer[7] and "Airplane Design: Part VIII by Roskam[20]. The cost analysis prepared by Roskam was completed in a more detailed step by step process and produced the most realistic estimates. Therefore it is the only estimation presented in this report. The cost estimations are shown in 2007 US dollars.

10.1 Flyaway Cost

Airframe, avionics, engine, flight test, and R&D are all factors in the fly away cost estimate. In Fig. 10-1 below, the per unit aircraft cost decreases significantly as the production run increases.

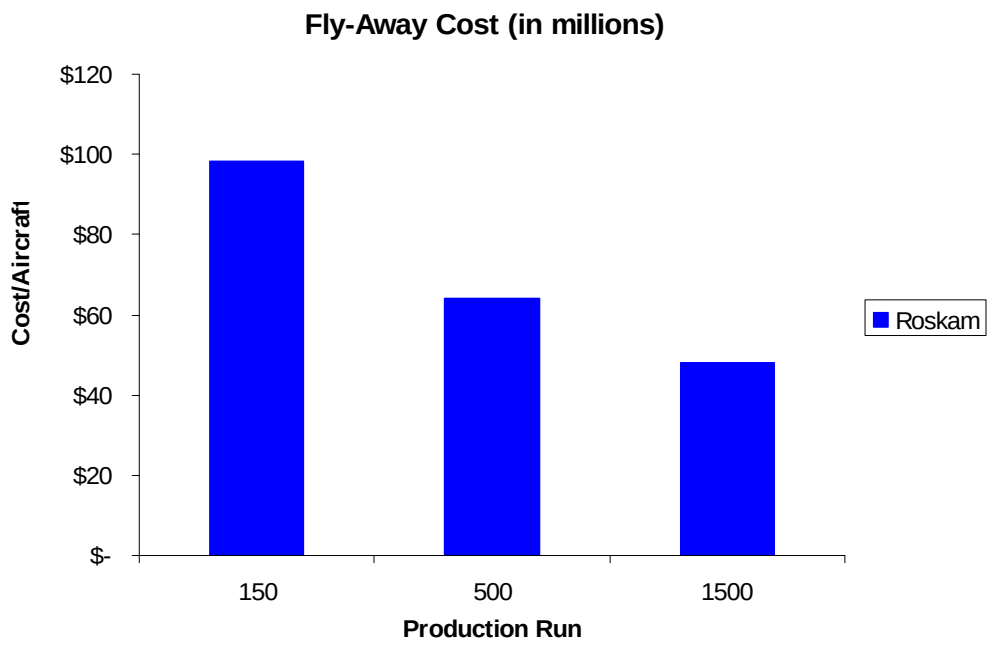

Figure 10-1. Roskam's Flyaway Cost Per Aircraft for Different Production Runs[20]

10.2 Operations and Maintenance Cost

The largest contributor to operations and maintenance cost is fuel, oil and lubricants at 36 percent. The average mission consumes about 70,000 lbs of fuel and a typical aircraft will fly about 200 missions in a year. This equates to 14,000,000 lbs of fuel a year costing 5.6 million dollars. The other contributors to operations and maintenance cost are direct personnel (19%), spares (16%), depot (15%), indirect personnel (13%), miscellaneous items (1%) and consumable materials (<1%) which is shown in Fig. 10-2 below.

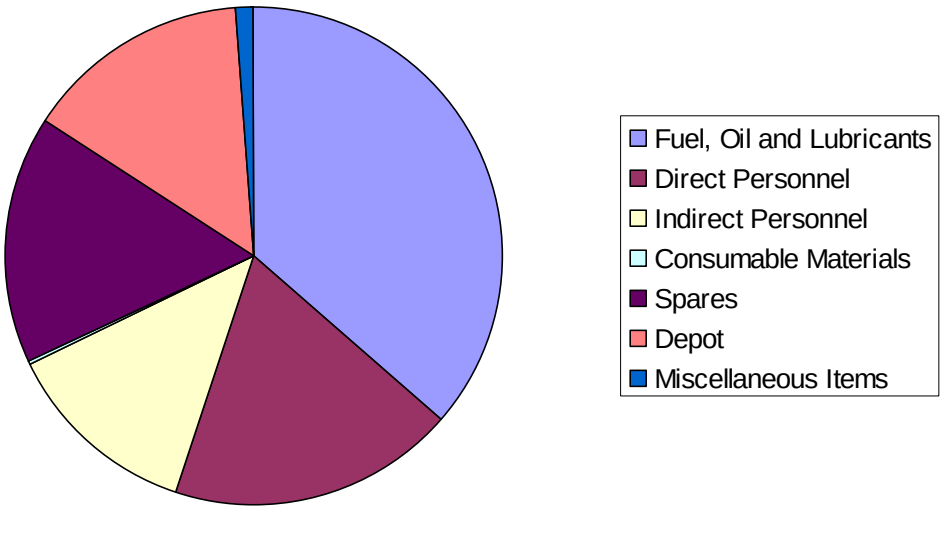

Figure 10-2. Operations and Maintenance Cost Distribution

The operations and maintenances cost is estimated to be $309.8 million for the life of the aircraft, which was assumed to be the average life span of a transport aircraft, 20 years. If the Swingliner is used longer than 20 years, both this cost and life cycle cost would increase.

10.3 Life Cycle Cost

The life cycle cost of an aircraft is made up of both the fly away cost and the operations and maintenance cost. In figure 10.3 below, the life cycle cost is shown for production runs of 150, 500, and 1500 aircraft with the aircraft having a life span of 20 years.

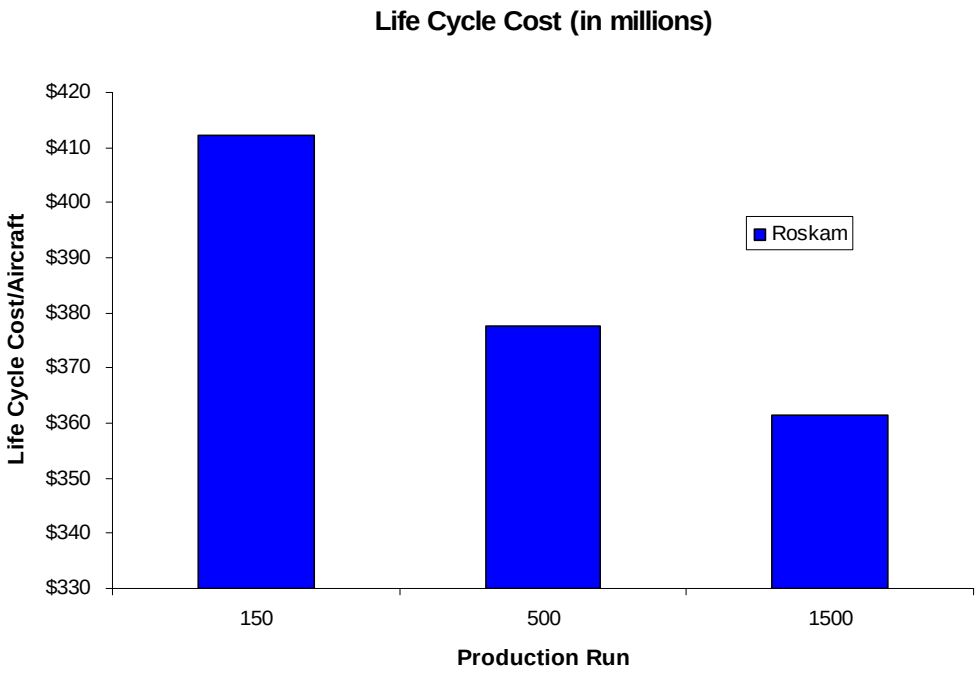

Figure 10-3. Roskam's Life Cycle Cost Per Aircraft for Different Production Runs[20]

Conclusion

Military operations of the late 20th and early 21st centuries have shown that the ability to operate aircraft from remote unimproved runways is necessary. Current aircraft in the Air Force inventory are not designed to fulfill this mission. The Swingliner has been developed as a solution to this need.

The design team of the Initech Aircraft Cooperation has presented the Swingliner in response to the 2006/2007 AIAA design competition RFP. The Swingliner embodies Initech Aircraft's design philosophy of striving for effectiveness and efficiency in aircraft design.

It has been shown that the Swingliner is capable of meeting or surpassing all RFP requirements including:

- Primary mission – Carry the FDAV (60,000 lbs) 600 NM and deploy the vehicle and return to the starting point without refueling.
- Ferry mission – Carry 20,000 lbs of payload 3200 NM.
- Field Performance – Take off in 2,500 ft at sea level on a hot day, Land in 2,500 ft on a hot day
- Safety – All applicable Mil-Spec and FAR requirements met

The JTC -2 E Swingliner is the ideal solution to the problem of austere transport capabilities. It is a technologically sound transport aircraft capable of handling the demand for operations in remote unimproved areas for years to come.

References

[1]W.H Mason, "Wing Planform Analysis Program", Department of Aerospace and Ocean Engineering, Virginia Polytechnic Institute and State University, Blacksburg URL: http://www.aoe.vt.edu/~mason/Mason_f/MRsoft.html, (January 2006).

[2]Murman, Earl M., Bailey, Frank R., and Margaret L. Johnson. "TSFOIL2".

[3]Roe, Marshall H., Renselaer, Dirk J., and Ralph A. Qaum. "STOL Tactical Aircraft Investigation, Externally Blown Flap, Volume II Design Compendium" AFFDL TR 73-19, April 1973.

[4]McCormick, B. W., *Aerodynamics, Aeronautics and Flight Mechanics*, 2nd Ed., John Wiley & Sons, Inc., New York, 1995

[5]Roskam, J., *Airplane Design Part VI: Preliminary Calculation of Aerodynamic, Thrust and Power Characteristics,*, DARcorporation, 2004.

[6]Lamar, John. "VLMpc", NASA Langley.

[7]Raymer, D. P., *Aircraft Design: A Conceptual Approach*, AIAA Education Series, Reston, VA, 2006.

[8]Mason, "Skin Friction and Form Drag Estimation Program", Department of Aerospace and Ocean Engineering, Virginia Polytechnic Institute and State University, Blacksburg, VA. November 2002, URL: http://www.aoe.vt.edu/~mason/Mason_f/MRsoft.html - SkinFriction.

[9]Calarese W, Crisler, W. P., and Gustafson, G. L. "Afterbody Drag Reduction by Vortex Generators" AIAA paper 85-0354, 1985.

[10]"Aeronautics Learning Laboratory for Science, Technology, and Research". URL:

http://www.allstar.fiu.edu/AERO/P&WEngines05.html

[11]"Model CF6-80C2". URL: http://www.geae.com/engines/commercial/cf6/cf6-

80c2.html

[12]"Aeronautics Learning Laboratory for Science, Technology, and Research". URL:

http://www.allstar.fiu.edu/AERO/P&WEngines05.html

[13]"C-17 Nacelle/Propulsion System". URL:

http://www.vought.com/ProdProg/military/c17nps.htm

[14]Scott, Jeff. "Reducing Landing Distance". URL: http://www.aerospaceweb.org/propulsion/q0181.shtml

[15]Tavernetti, L. "The C-17: Modern Airlift Technology". AIAA-92-1262, 3 Feb. 1992.

[16]Callister, W.D. *Fundamentals of Materials Science and Engineering: An Integrated Approach*. 2ed. John Wiley & Sons Inc., Hoboken, 2005.

[17]The Goodyear Tire & Rubber Company. *Aircraft Tire Data Book*. Akron, 2002.

[18] URL: http://www.hs-powersystems.com/products/aps2000pds.htm

[19]URL: http://www.honeywell.com/sites/aero/Military-Aircraft3_C5470C98A-2B24-D58B-E116-A12EE0618C23_H9005BB20-92E3-0B4F-1620-9EE0D47DE10C.htm

[20]Roskam, Jan Dr., *Airplane Design Part VIII: Airplane Cost Estimation: Design, Development, manufacturing and Operating*." 1990.

[21]URL:http://www.nsd.es.northropgrumman.com/Html/Avionics-Mission-Management-Computer-GII/Brochure/Avionics-Mission-Management-Computer-GII.pdf

[22]URL:http://www.parkairsystems.com/documents/sites/1/Examples/PAE_3000_BROCHURE.pdf

[23]URL:http://www.rockwellcollins.com/ecat/gs/AN_ARC-220.html

[24]URL:http://www.nsd.es.northropgrumman.com/Automated/products/AN_APX_121_V_Mode_S_Mark_XII_IFF_Transponder.html

[25]URL:http://www.c-at.com/awispages/awis.html

[26]URL:http://www.nsd.es.northropgrumman.com/Automated/products/LN-100R_Embedded_INS-GPS.html

[27]URL:http://www.es.northropgrumman.com/ASD/brochures/APR-39BV2.pdf

[28]URL:http://www.dsd.es.northropgrumman.com/DSD-Brochures/dircm/AAR54.pdf

[29]URL:http://www.flir.com/imaging/nmc/media/original/65509748-d264-4a2e-aba0-57b6dbc7d8cb.pdf

[30]URL:http://www.rockwellcollins.com/ecat/gs/FMR-200X.html