Advanced Logistics Delivery System
Glider Design Team

Final Design Review

May 3, 2005

Team Members

- Chris Imhof – Stability & Control
- Laura Morgan – Leader & Launch System
- David Rogers – Aerodynamics
- Adam Russell – Design Configuration
- Andy Tuggle – Structures
- Sean Tully – Wing Deployment/Design
- Lesley Walcourt – Avionics & Power
- Charles Walston – Aerodynamics
- Patrick Williams – Structures
- Brian Mohns – Glider Construction

Presentation Outline

- Introduction
- Initial Glider Configurations
- Final Glider Configuration
- Analysis of Glider Design
  - Glider Aerodynamics
  - Structures Analysis
  - Wing Deployment
  - Stability and Control
  - Weights
  - Avionics Packages
  - Ship Storage
  - Total Cost Estimates
- Conclusions

Project Objectives

- To provide a low cost, disposable glider to carry supplies to troops in hostile territories.
- Ship launch design is an alternative to flying planes to drop supplies over hostile territories.
- Designed premise from Carderock Innovation Center and the Center of Innovations in Ship Design.

Request For Proposal

- To design an expanding wing glider with the following characteristics:
  - Payload = 1000 lbs
  - Range = 50 miles
  - Launch Speed = 500 knots
  - Launch Acceleration = 30g
  - Cruise Speed = 60 knots
  - Launch Pod Dimensions = 10 ft span

Project Drivers

- Range Requirements
- Payload Requirements
- Cost (glider must be disposable)
- Inflatable Wings/Size Requirements

Initial Glider Configurations

Design Decision Tree

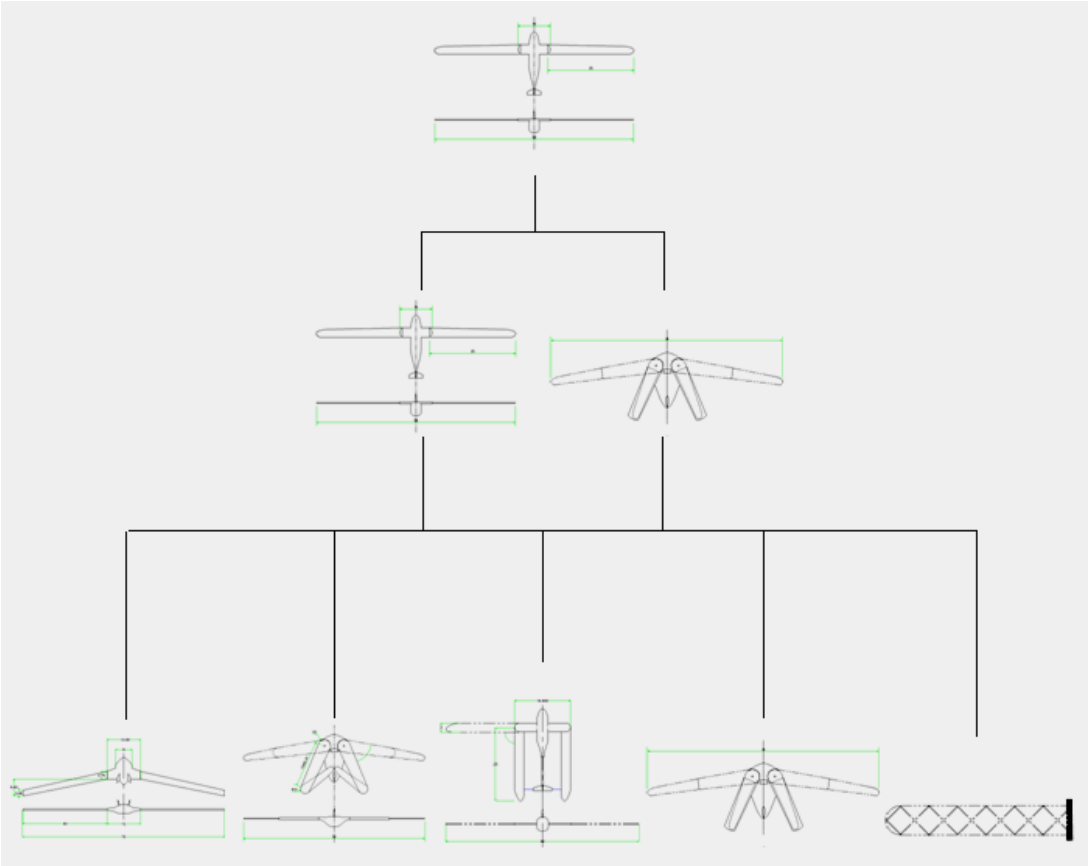

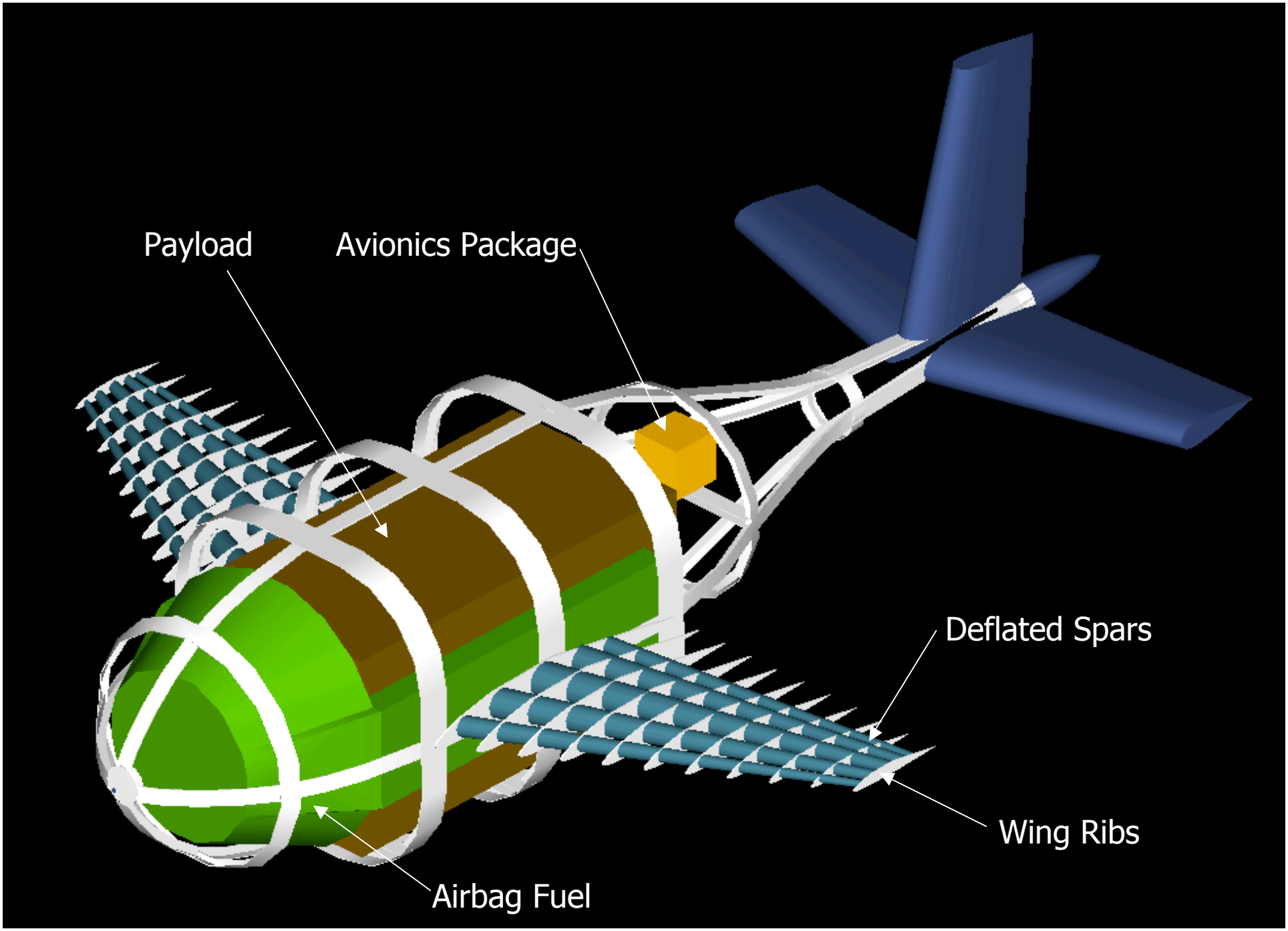
Payload
Avionics Package
Deflated Spars
Wing Ribs
Airbag Fuel

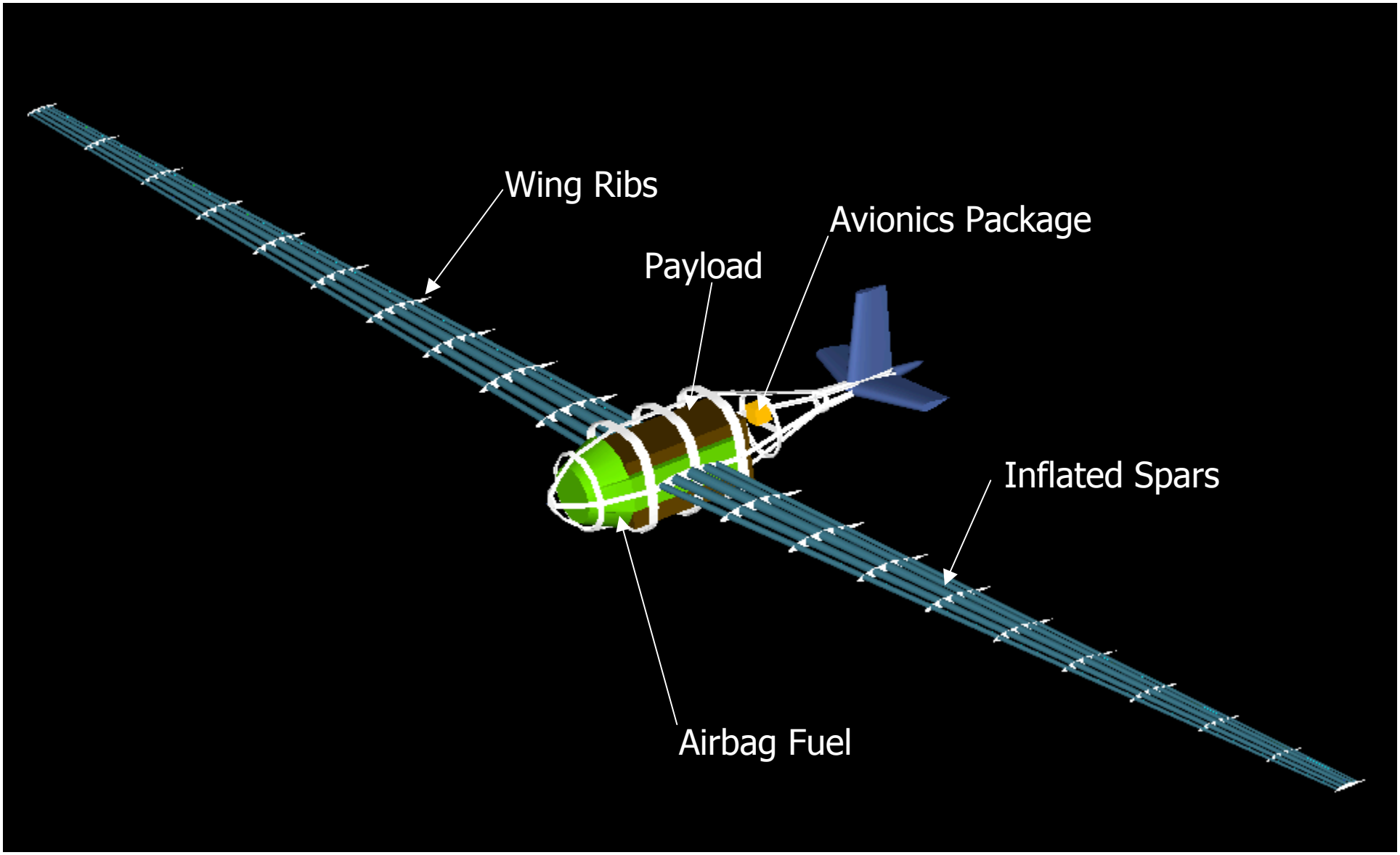
Wing Ribs
Avionics Package
Payload
Inflated Spars
Airbag Fuel

Final Configuration

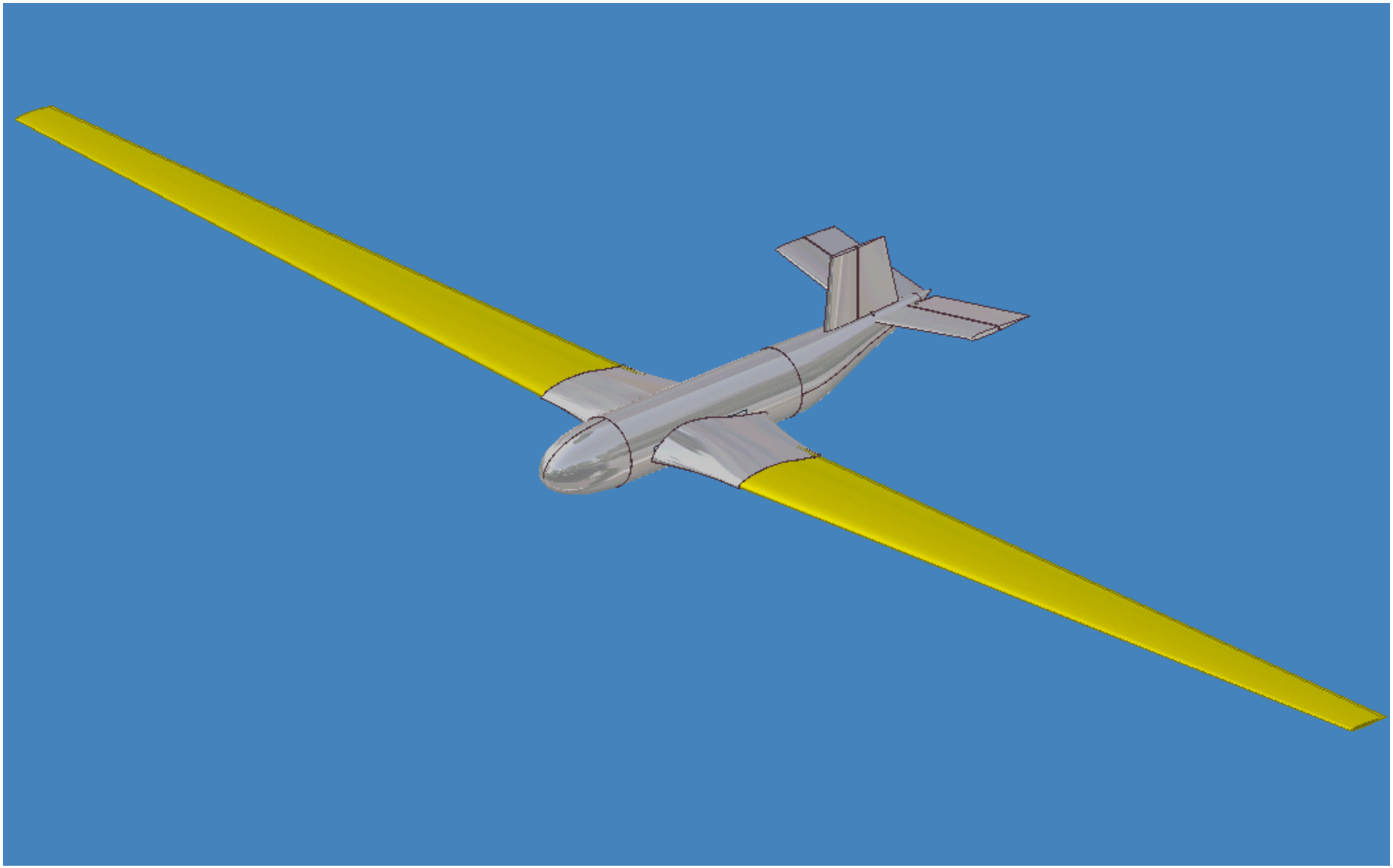

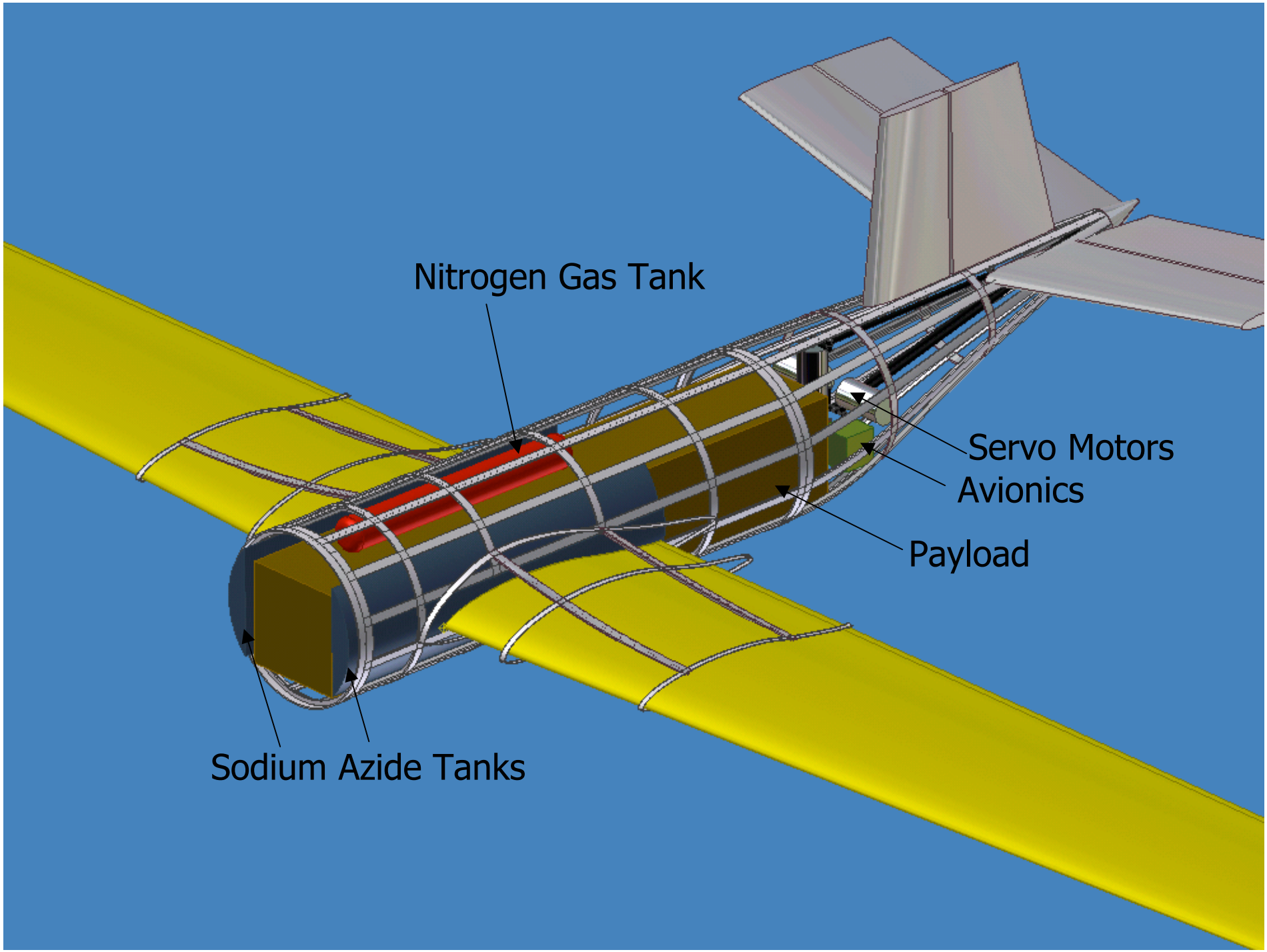
Nitrogen Gas Tank
Servo Motors
Avionics
Payload
Sodium Azide Tanks

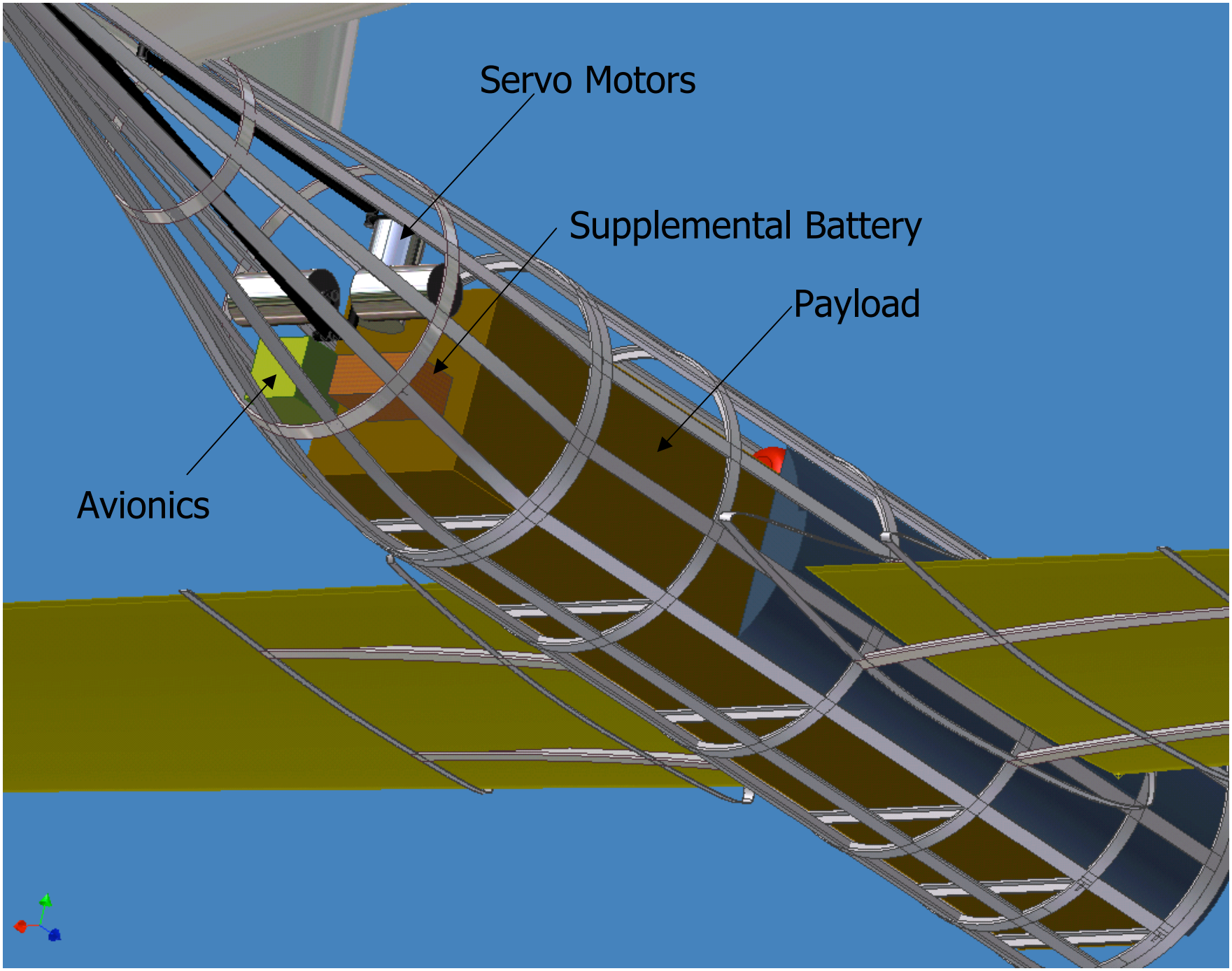
Servo Motors
Supplemental Battery
Payload
Avionics

Payload

- Volume
  - Dry payload
  - Wet payload
- Dimensions
  - 2 X 2 X 4 ft.
  - 1.5 X 1.5 X 9 ft.

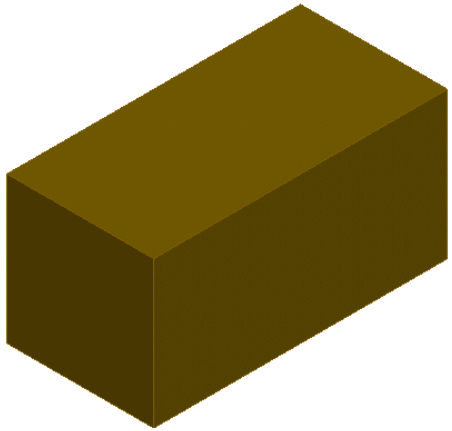

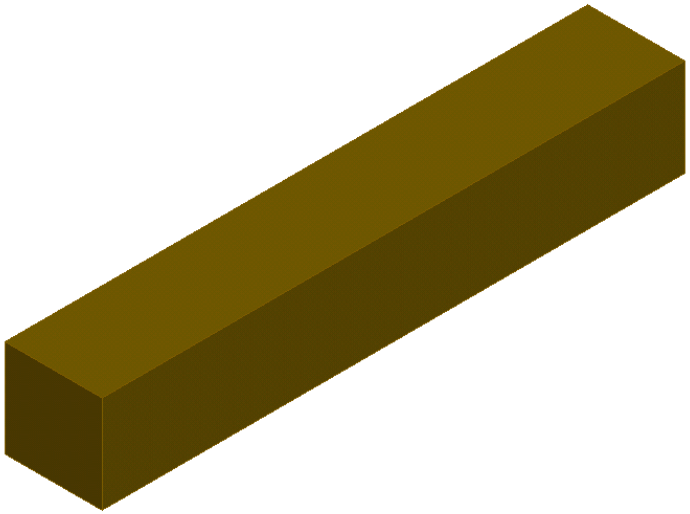

Payload Continued

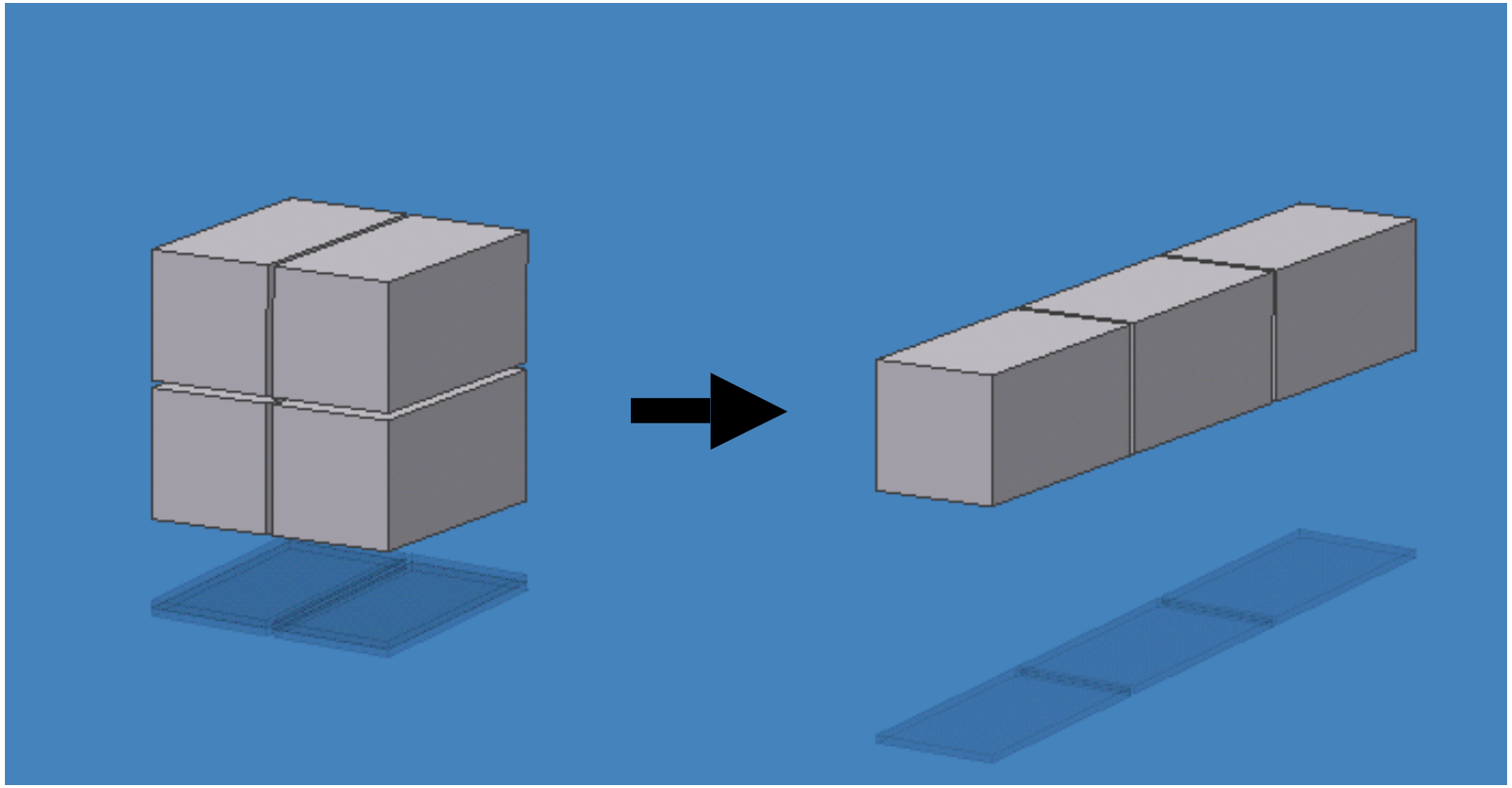

Fuselage

- Frontal profile shape change.
  - Squared sides
  - Circular
- Added tank to regulate pressure on descent.

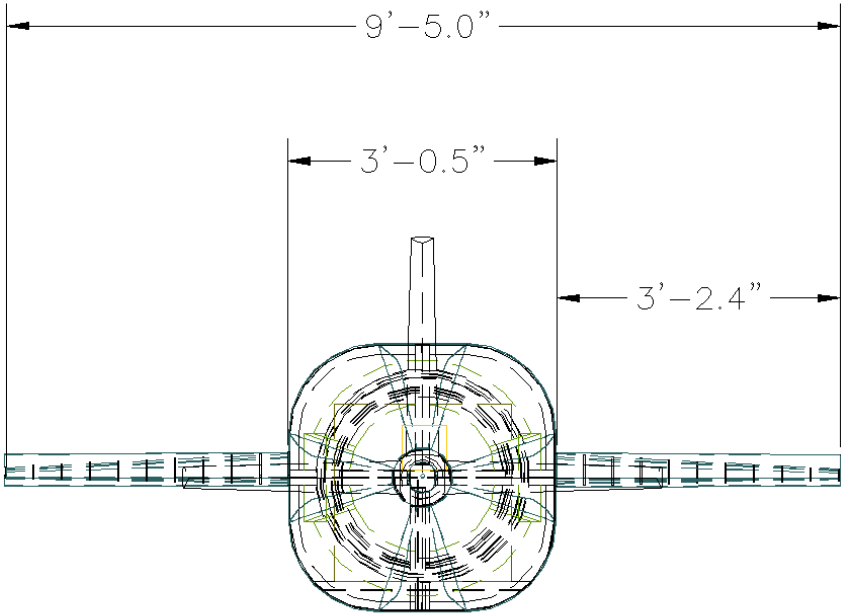

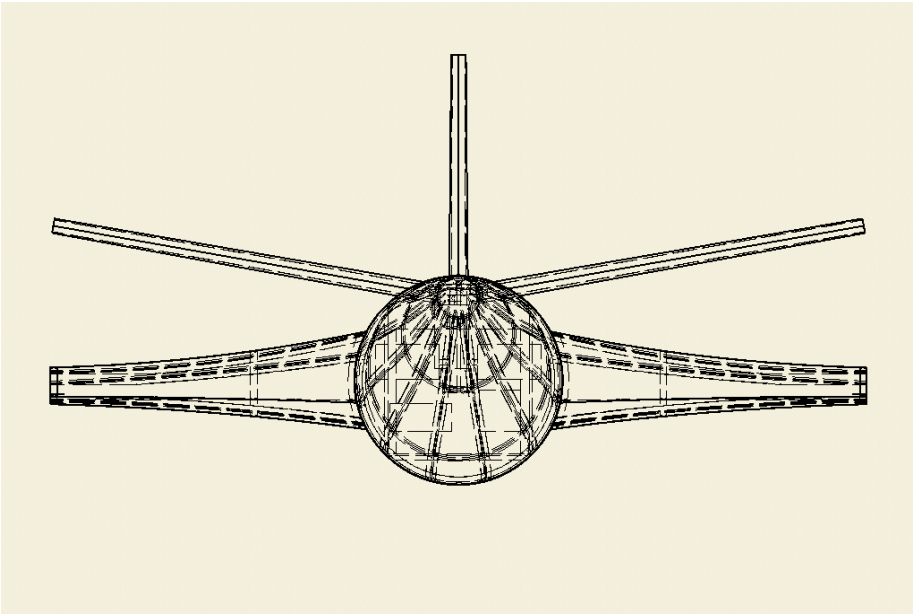

Fuselage

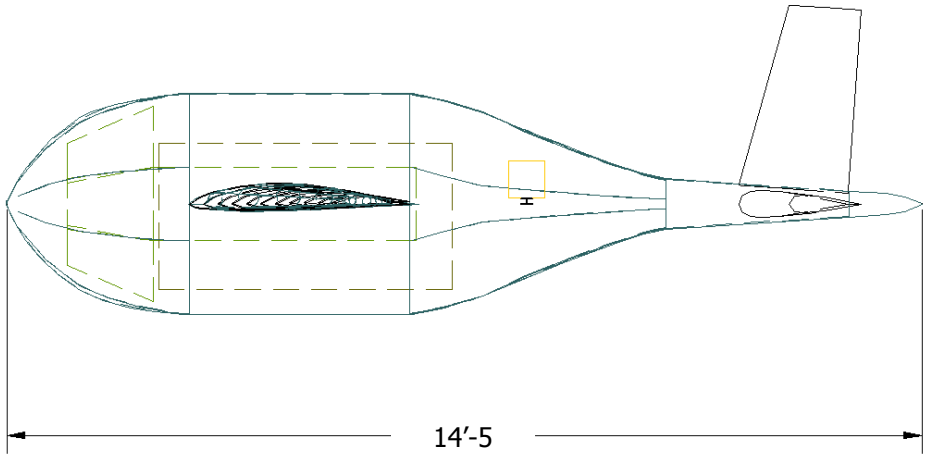

- Total length change.
  - 15 ft.
  - 18 ft.
- Elevated rear section.

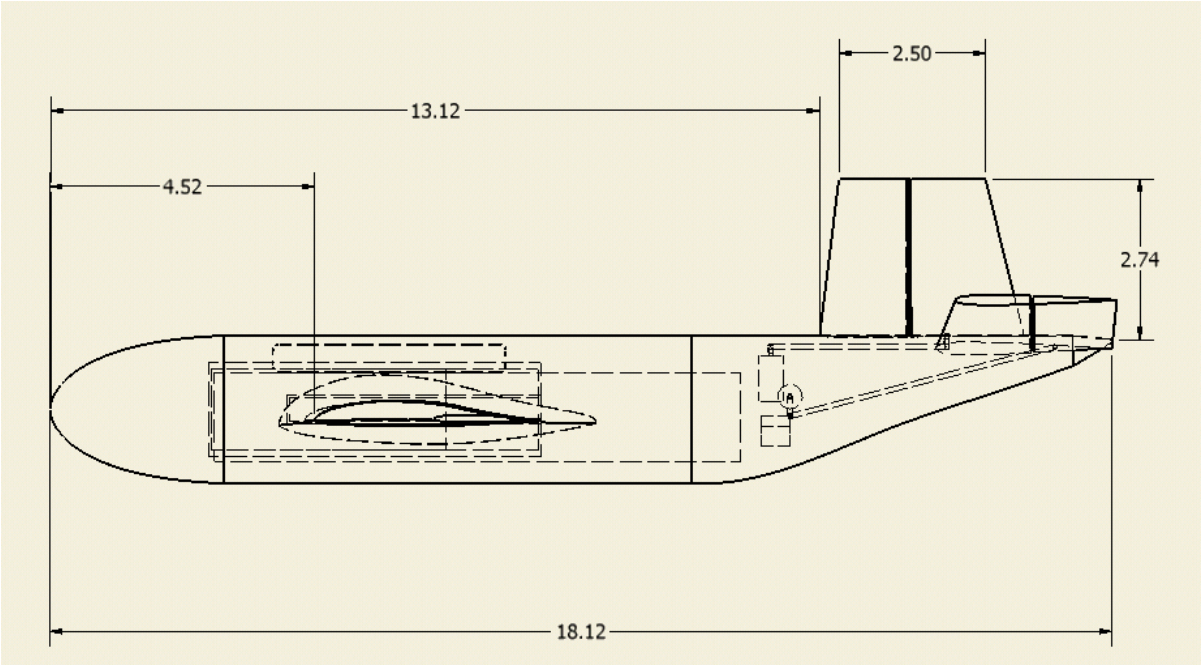

Sodium Azide tank

- Required volume changes.
- Frontal tank section becomes unnecessary.
- Allows for access to the payload through the noescone.

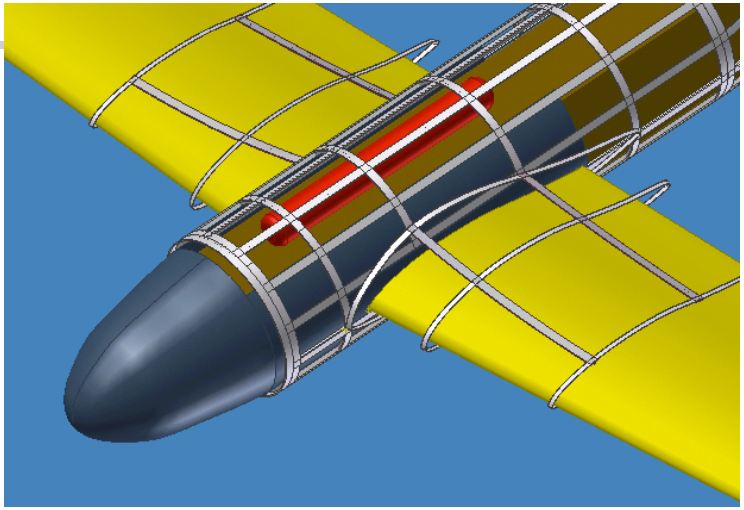

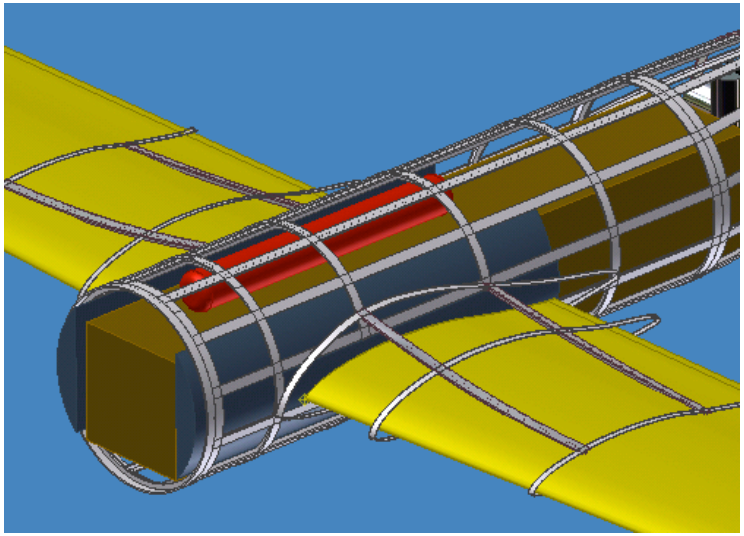

Solid Wing Section

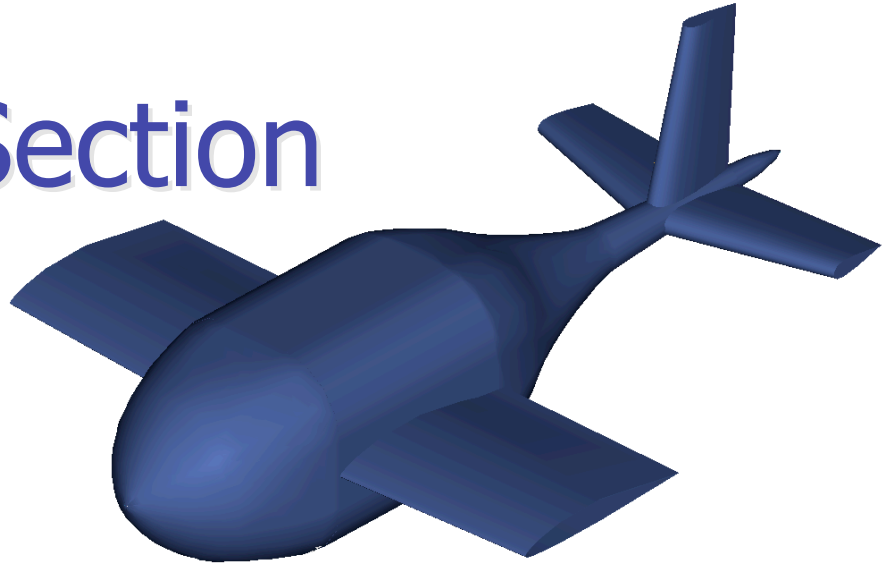

- Added structural support.
- Delivery of reacted sodium azide to inflatable wings.
- More room provided for inflatable wings during launch phase.

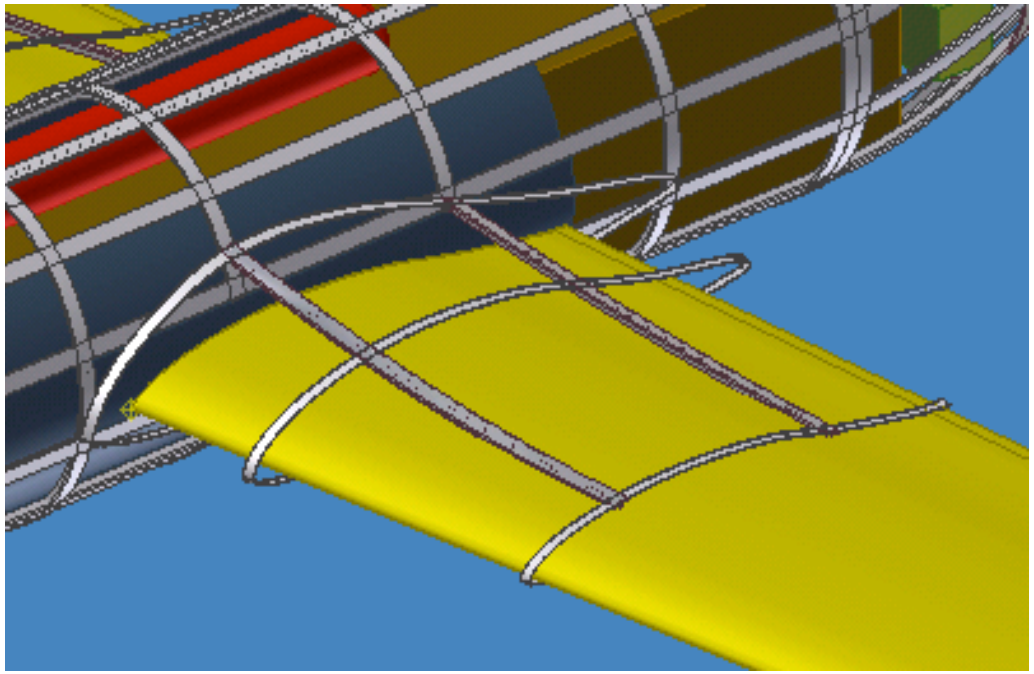

Inflatable Wings

- Inflatable spars with solid ribs filling a soft skin.
- Completely inflatable wings with segmented inflation sections.

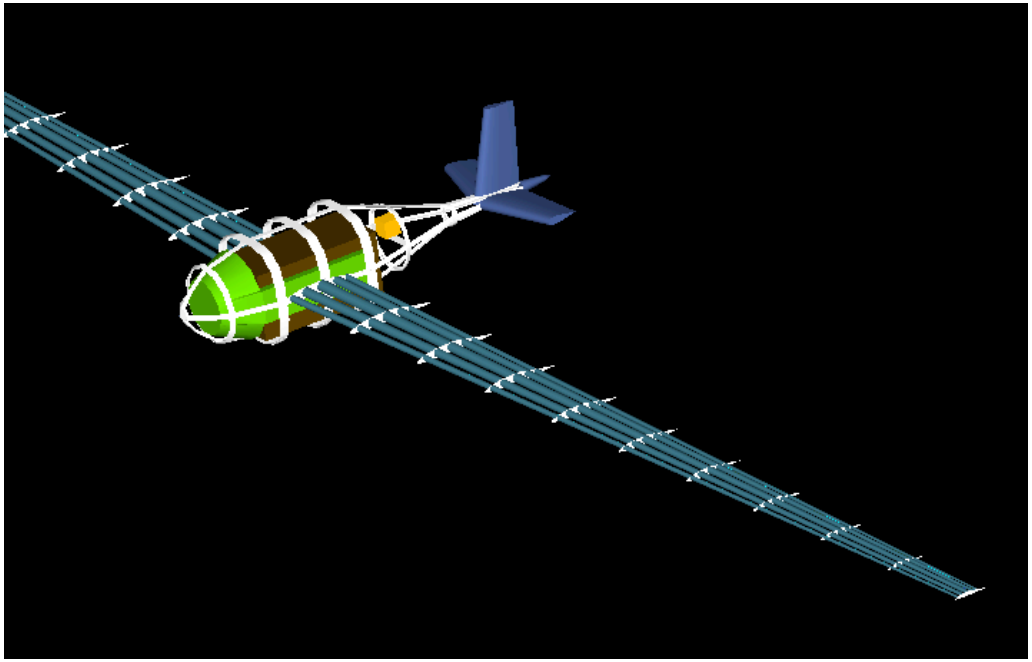

Servo Motors

- Servo Motors are used to physically move the control surfaces on the tail.
  - 3 servo motors, for the rudder and 2 horizontal stabilizing surfaces.

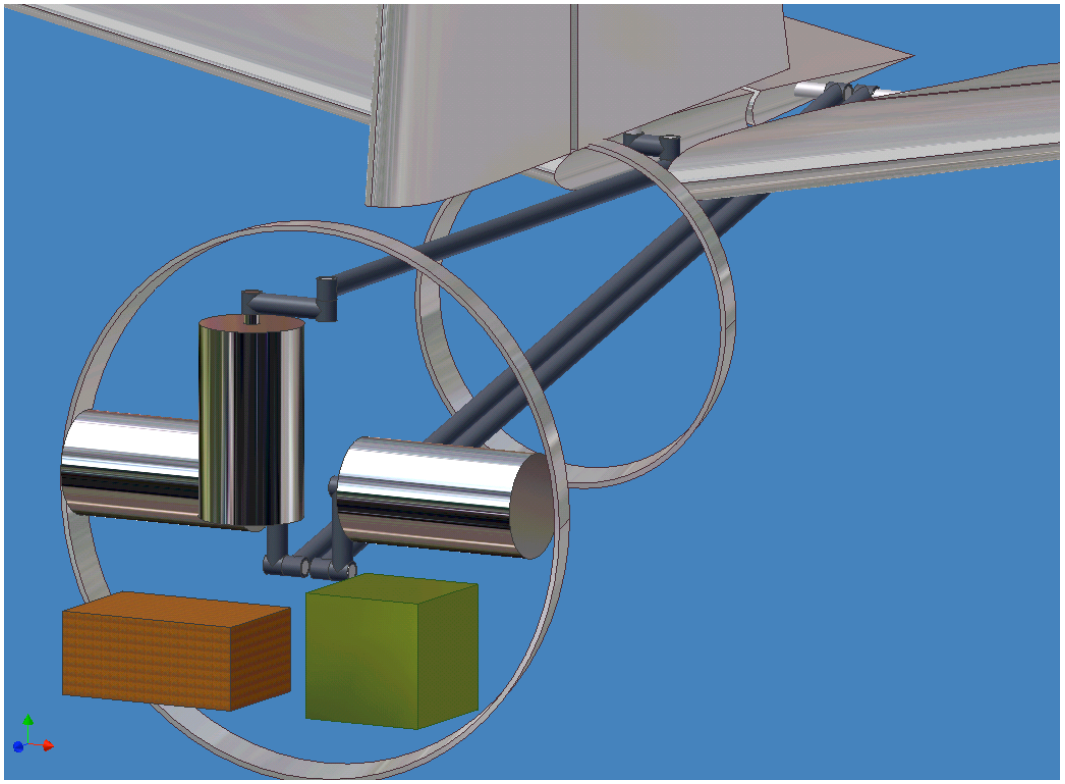

Glider Aerodynamics and Performance

Launch Phase

Glide Phase

Launch Characteristics

- launch speed = 500 knots
- 50 mile goal
  - Range=(L/D)_height
  - Assumed L/D of 33 for a calculations
  - 8000ft goal
    - Exceeding this height will allow us to either travel further than 50 miles or allow us to lower the L/D which would result in reduced manufacturing costs.

Constant Flight Angle

Free Body Diagram:

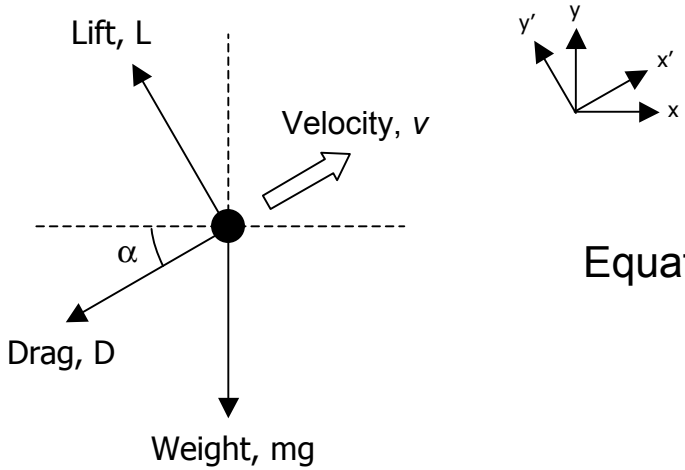

Sum of Forces:

$$F_{x'} : -D - mg\sin\alpha = m\frac{d^2x'}{dt^2}$$

$$F_{y'} : L - mg\cos\alpha = 0$$

Equations of Motion:

$$\frac{d^2x'}{dt^2} = -\frac{mg^2\cos^2\alpha}{\frac{1}{2}\rho\left(\frac{dx'}{dt}\right)^2 S\pi AR\varepsilon} - g\sin\alpha - \frac{\rho\left(\frac{dx'}{dt}\right)SC_{D_0}}{2m}$$

$$\frac{dy'}{dt} = 0$$

Launch Angle Determination

- With a C_{lmax}=1.0, a launch angle between 30º and 35º is needed to reach 8000ft
- Chose 30º because of the reduced stress with the intention of optimizing

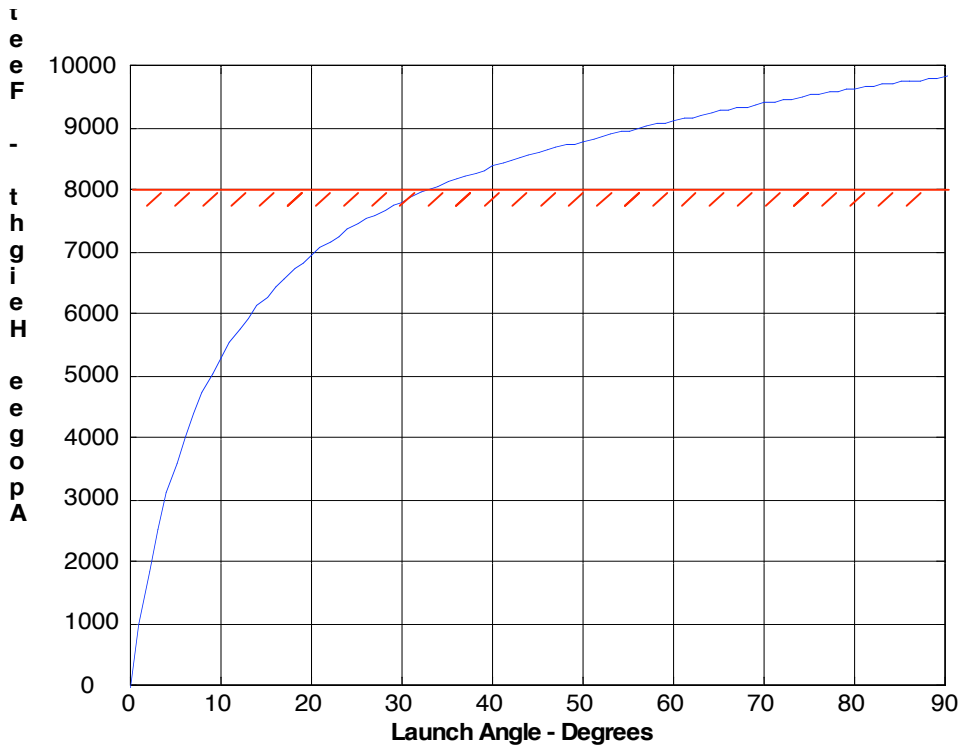

Sensitivity Analysis

- Initial wing span of 9.5ft
- Reduced to 8.25 to gain approximately 50ft

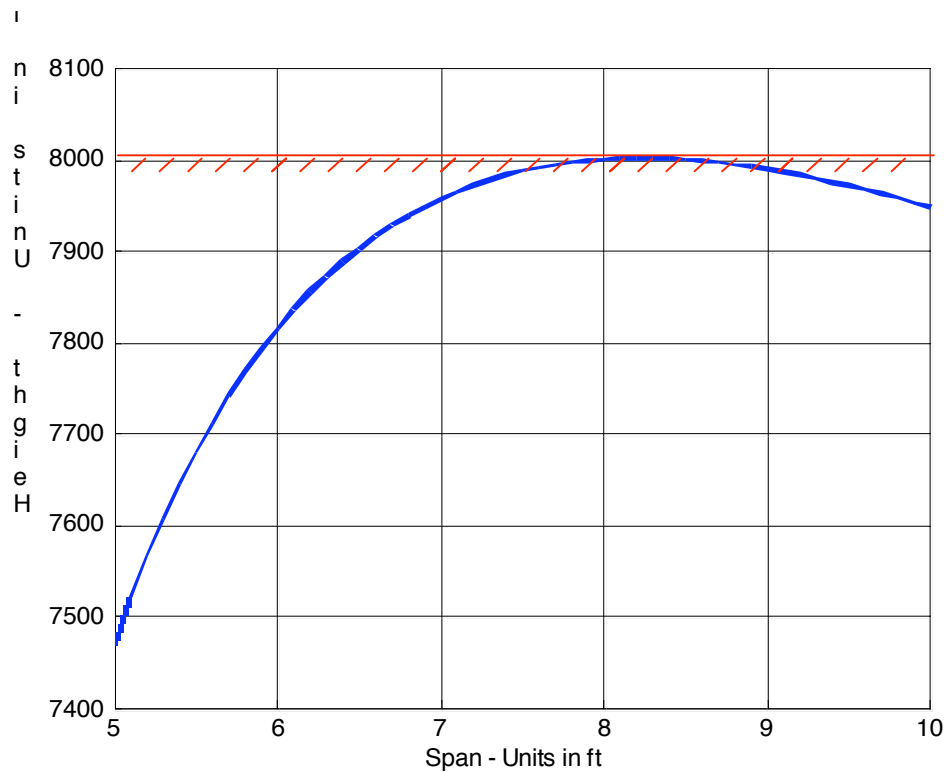

Sensitivity Analysis

- Initial chord length of 3.5ft
- Maximum altitude with chord length of 2ft
  - This reduces the space for internal structure and affects glide properties

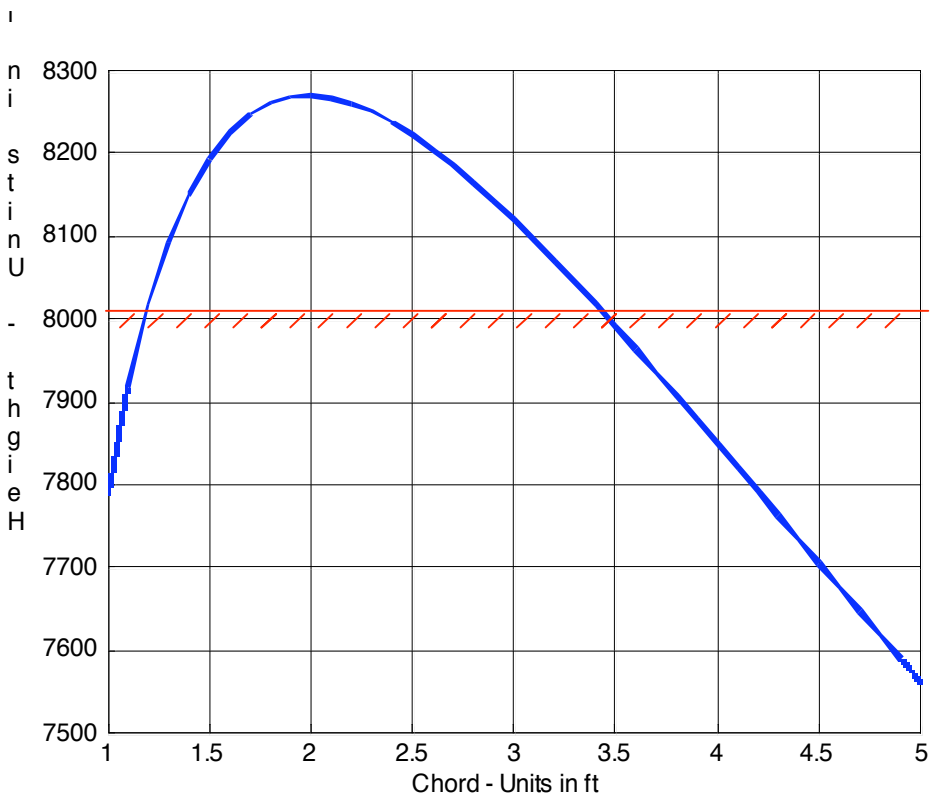

Sensitivity Analysis

- Initial Temperature of 520ºR → 60ºF
- In order to reach 8000ft, sea level temperature needs to be above 525ºR

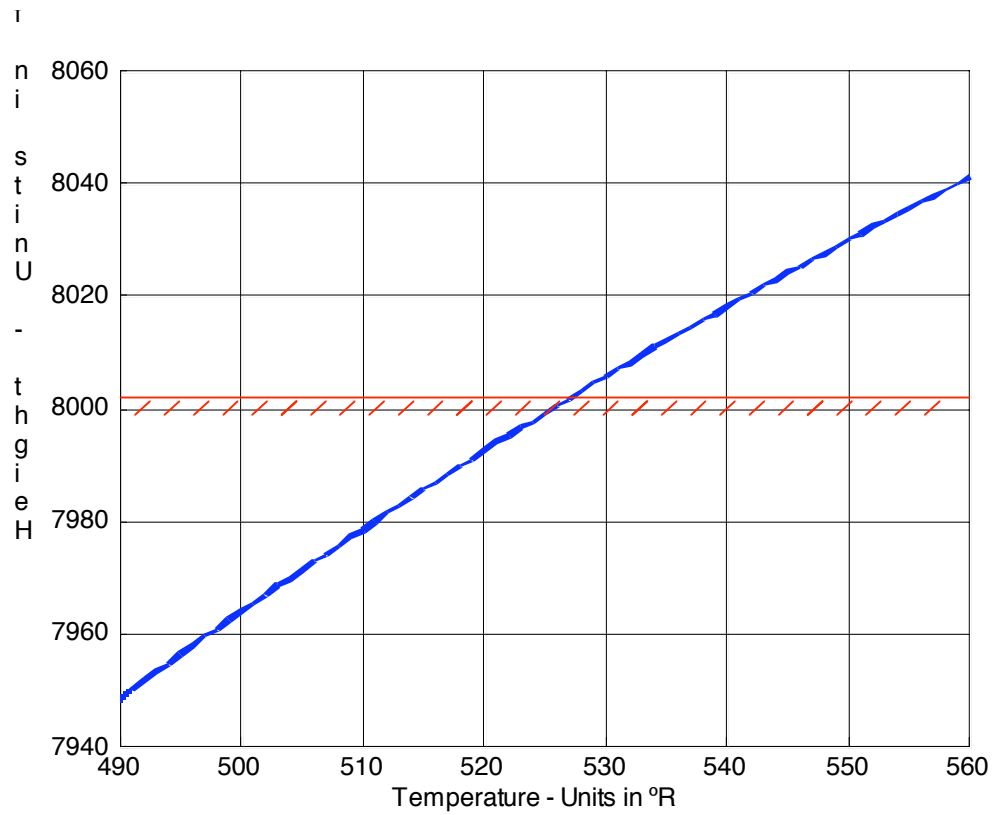

"Friction" Results

```
 CASE TITLE: Glider

 SREF =    45.62400  MODEL SCALE =  1.000  NO. OF COMPONENTS = 4
 input mode =  0  (mode=0: input M,h;  mode=1: input M, Re/L)

COMPONENT TITLE    SWET (FT2)  REFL(FT)   TC  ICODE FRM FCTR FTRANS
Fuselage            117.0071   18.131   0.138   1   1.0952   0.0000
Wings                68.8914    4.622   0.174   0   1.3587   0.0000
Horiz. Tail          57.5000    2.875   0.200   0   1.4400   0.0000
Vert. Tail           25.0000    2.750   0.200   0   1.4400   0.0000

   TOTAL SWET =     268.3985

 REYNOLDS NO./FT =0.480E+07   Altitude =   4000.00   XME =  0.756

   COMPONENT        RN        CF     CF*SWET   CF*SWET*FF   CDCOMP
Fuselage         0.871E+08  0.00202  0.23659     0.25911   0.00568
Wings            0.222E+08  0.00248  0.17080     0.23207   0.00509
Horiz. Tail      0.138E+08  0.00267  0.15368     0.22130   0.00485
Vert. Tail       0.132E+08  0.00269  0.06730     0.09691   0.00212
                               SUM = 0.62837     0.80939   0.01774

FRICTION DRAG: CDF = 0.01377           FORM DRAG: CDFORM = 0.00397

 SUMMARY

  J    XME     Altitude      RE/FT       CDF     CDFORM   CDF+CDFORM
  1   0.756   0.400E+04    0.480E+07   0.01377   0.00397   0.01774
```

Post Wing Deployment Glide

- Drag and Performance Analysis
  - XFOIL Boundary Layer Analysis
    - Inflatable wing analysis
  - Fuselage and Tail Friction Analysis
    - Turbulent flow over the fuselage and airfoils
  - Performance Analysis for Maximum and Minimum Weight

Glide Characteristics

- Minimum Requirements for a 50 Mile Range
- Primary Area of interest for the glide was the Inflatable Wing
  - 50% of the Overall Zero Lift Drag on the glider can be associated with wing airfoil
    - C_{D0W}= 0.00892
  - Root Foil: Wortmann FX 67-K-170
  - Tip Foil: Wortmann FX 67-K-150

Advanced Logistics Delivery System Glider Design Requirements			
Weight (lbs.)	1500	**C_{Lmax}**	1.1775
Range (ft.)	264000	**V_{max} (ft/s)**	88.106
L/D_{max}	33	**Mach Number**	0.0811
Minimum Altitude (ft.)	7750	**C_{D0}**	0.01784
Aspect Ratio	25.77	**C_{Di}**	0.01786
Span (ft.)	67	**C_D**	0.0357
Root/Tip Chord (ft.)	3.852/1.348	**Glide Angle (deg.)**	-1.74
Wing Area (sq. ft.)	174.2	**Minimum Sink (ft/s)**	-2.68
Efficiency Factor	0.96	**Root Reynolds Number**	1780000
Taper Ratio	0.35	**Tip Reynolds Number**	623000

Inflatable Wing Analysis

- Contour Modification to simulate pressure loss
  - Sine wave adjustment for a 1% pressure loss
  - On board tank and actuator to restore pressure
- Use of a material that will provide laminar flow
  - Use of n_{crit} value of 9 in XFOIL Analysis

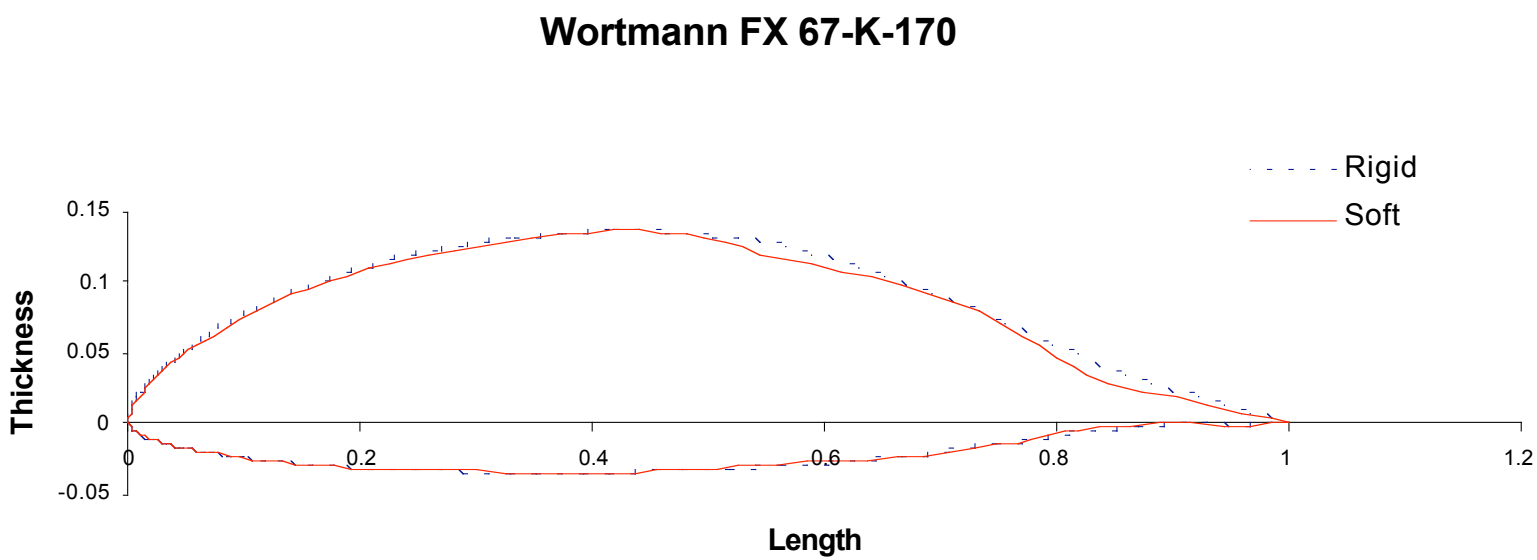

Inflatable Wing Analysis

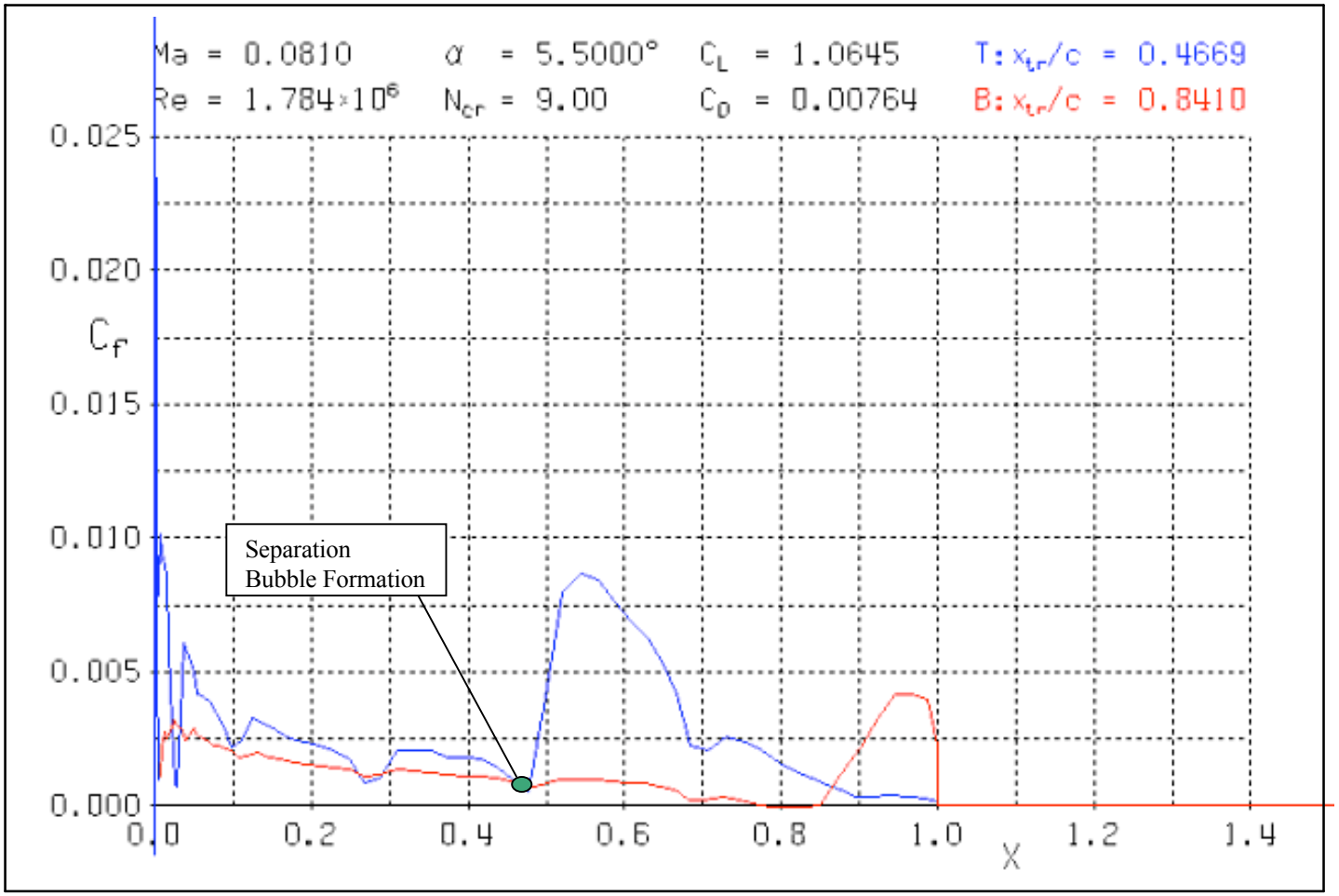

Inflatable Wing Analysis

- Separation Bubble Formation
  - Tripped the flow before bubble formation
- Comparison of Rigid Wing and 1% deflated Wing
  - Below max C_{D0W} of 0.00892

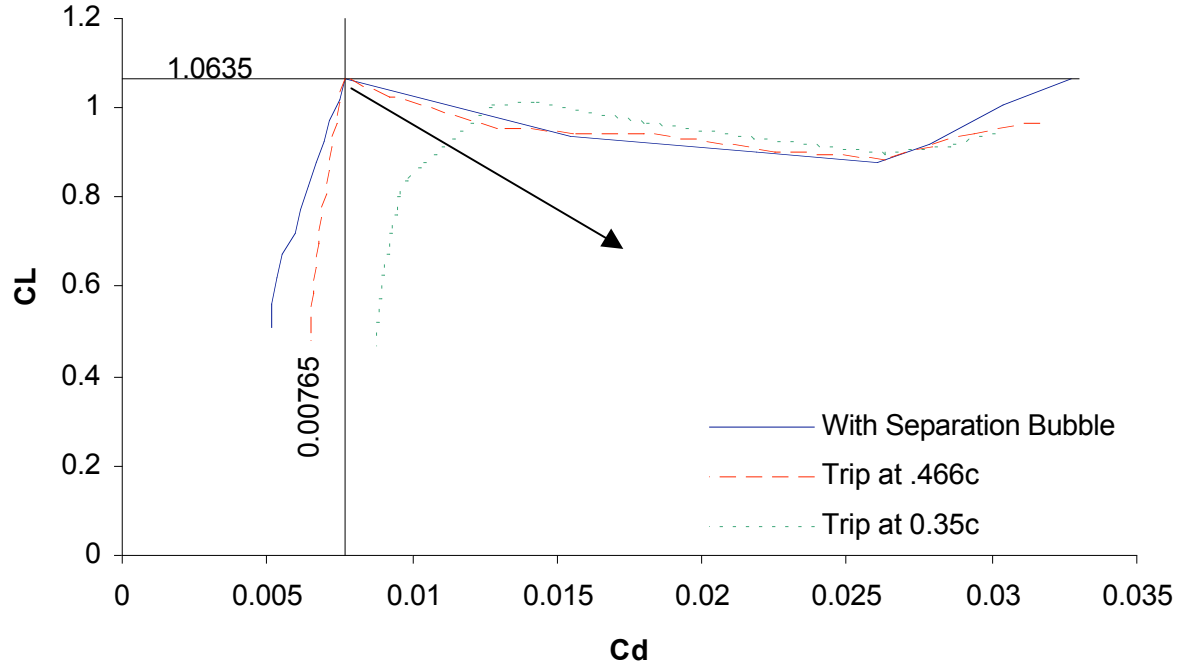

Airfoil	Type	CD0wing	% Change	Cl	% Change
Wortmann FX 67-K-170	Rigid	0.00629	21.62	1.0651	0.16
	Deflated	0.00765		1.0634	
Wortmann FX 67-K-150	Rigid	0.00852	-6.34	1.0367	9.59
	Deflated	0.00798		0.9373	

ALDS Lift and Drag Estimate

- Friction Code
  - Analyzed the fuselage, horizontal, and vertical stabilizers
  - Inputted wetted area, reference length, mach number, and altitude
  - Assumed flow turbulent over entire area to maximize drag
  - Body Zero Lift drag of 0.00461
- Lifting Line Theory
  - Determined Lift Coefficient and induced drag coefficient
- Overall Drag
  - Combined Friction CD0 and CD0 of the wing to get total
  - Increased by 20% to account for track attachment and wing interference

Finite Airfoil Type	CL	Cdi	CD	L/D
Rigid	0.97813	0.01354	0.02796	34.984
One Percent Deflation	1.02219	0.01479	0.02970	34.418

ALDS Glide Performance

- Maximum Weight
  - Increases Velocity and the overall Wing Loading
- Minimum Weight
  - Low Velocity
  - Fly with ballast to increase speed

Performance of ALDS Glider with One Percent Deflated Wing					
Constants		**Calculations**			
Altitude(ft)	7750	**From Drag Analysis**		**Minimum Weight (1400 lbs)**	
Density(slugs/ft^3)	0.001884	Cd0	0.0149	Cd0	0.0149
Viscosity(lb s/ft^2)	3.58318E-07	Clmax	1.0222	Clmax	1.0222
Weight(lbs)	**1759**	**Vmax(ft/s)**	**99.79**	**Vmax(ft/s)**	**89.03**
Eff. Factor, e	0.96	Glide Ang(deg)	1.6642	Glide Ang(deg)	1.6642
L/D Max	34.42	W/S (lbs/ft^2)	10.10	W/S (lbs/ft^2)	8.04
Mean Wing Chord(ft)	2.6	Min Sink(ft/s)	2.90	Min Sink(ft/s)	2.59
Wing Span(ft)	67	**Range(miles)**	**50.5**	**Range(miles)**	**50.5**
Wing Area(ft^2)	174.2	Reynolds Num.	2.021E+06	Reynolds Num.	1.803E+06
Aspect Ratio	25.77	Mach	0.0919	Mach	0.0820

Performance of ALDS Glider With Rigid Wing					
Constants		**Calculations**			
Altitude(ft)	7750	**From Drag Analysis**		**Minimum Weight (1400 lbs)**	
Density(slugs/ft^3)	0.001884	Cd0	0.0144	Cd0	0.0144
Viscosity(lb s/ft^2)	3.58318E-07	Clmax	0.9781	Clmax	0.9781
Weight(lbs)	**1759**	**Vmax(ft/s)**	**100.63**	**Vmax(ft/s)**	**89.78**
Eff. Factor, e	0.96	Glide Ang(rad)	1.6373	Glide Ang(deg)	1.6373
L/D Max	34.98	W/S (lbs/ft^2)	10.10	W/S (lbs/ft^2)	8.04
Mean Wing Chord(ft)	2.6	Min Sink(ft/s)	2.88	Min Sink(ft/s)	2.57
Wing Span(ft)	67	**Range(miles)**	**51.3**	**Range(miles)**	**51.3**
Wing Area(ft^2)	174.2	Reynolds Num.	2.038E+06	Reynolds Num.	1.818E+06
Aspect Ratio	25.77	Mach	0.0926	Mach	0.0826

Glider Structural Analysis

Solid Structures

Inflatable Wing Structures

Non-Inflatable Structural Design

Critical Structural Issues:

- Fuselage must be able to support payload under loads during launch
- Stub wing supports must resist bending moments acting on wing due to loads resulting from lift

Solution methods:

- Optimize structural components for minimum weight using structural theory
- Use factor of safety of 1.5 for all calculations
- Use excel solver for all optimization routines

Glider Structural Overview

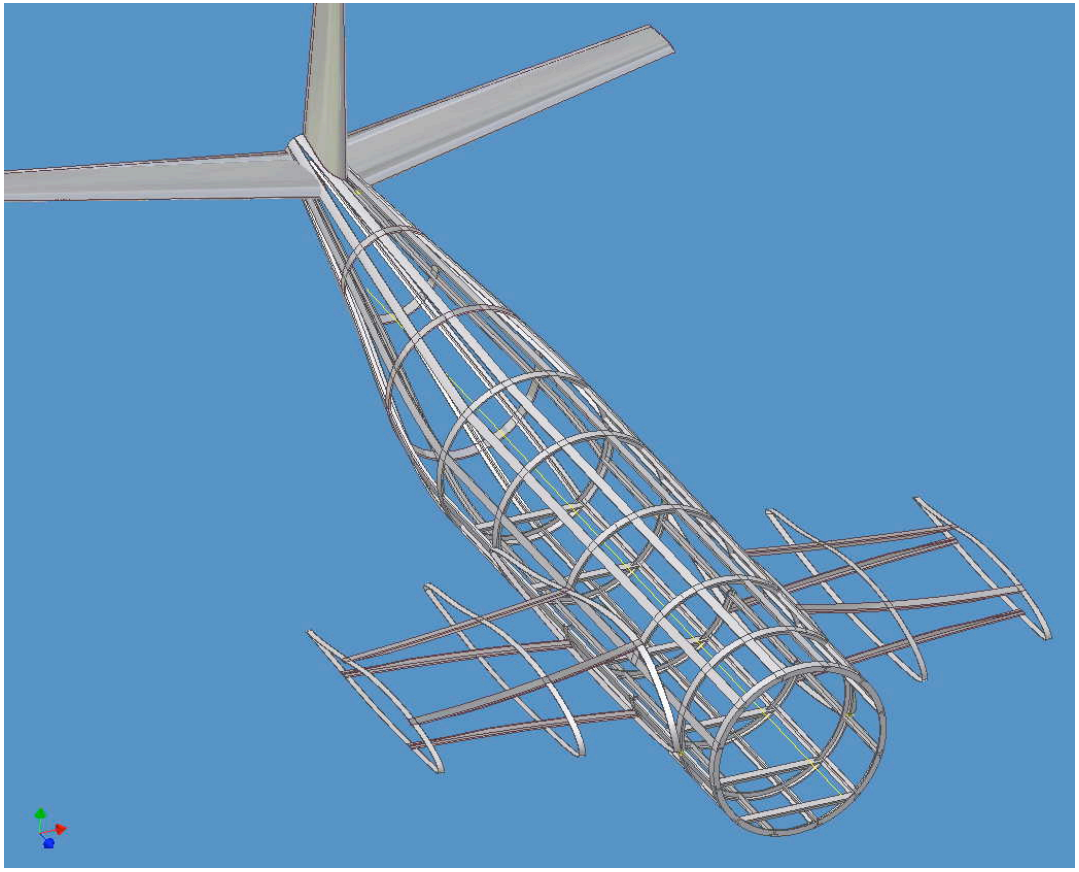

Materials

Carbon Reinforced Carbon Fiber:

Graphitized SIGRABOND type 1501 G

Flexural Strength (ksi)	37.0 - 46.2
Tensile Strength (ksi)	49.3 – 58
Modulus of Elasticity (10^6 psi)	10.15 – 12.33
Bulk Density (lb/in^3)	0.05238 – 0.05599
Shear Strength (ksi)	9.86

Pros:
- Light weight
- high strength
- Resistive to thermal deflections

Cons:
- Expensive
- Tough to manufacture
- Shear strength is based on an estimated value

Materials

Damping Composites:

ISODAMP C-3002 (E-A-R Specialty Composites)

Shear Strength (lb/in)	1504
Tensile Strength (ksi)	11.9
Weight (lb/ft^2)	t = 0.125 in, 0.07 t = 0.250 in, 0.14 t = 0.500 in, 0.28

Pros:
- Made specifically for skin design
- high resistance to shear
- low weight

Cons:
- High manufacturing cost
- Only available in certain thickness
- Expensive

Major Loads Due to Payload

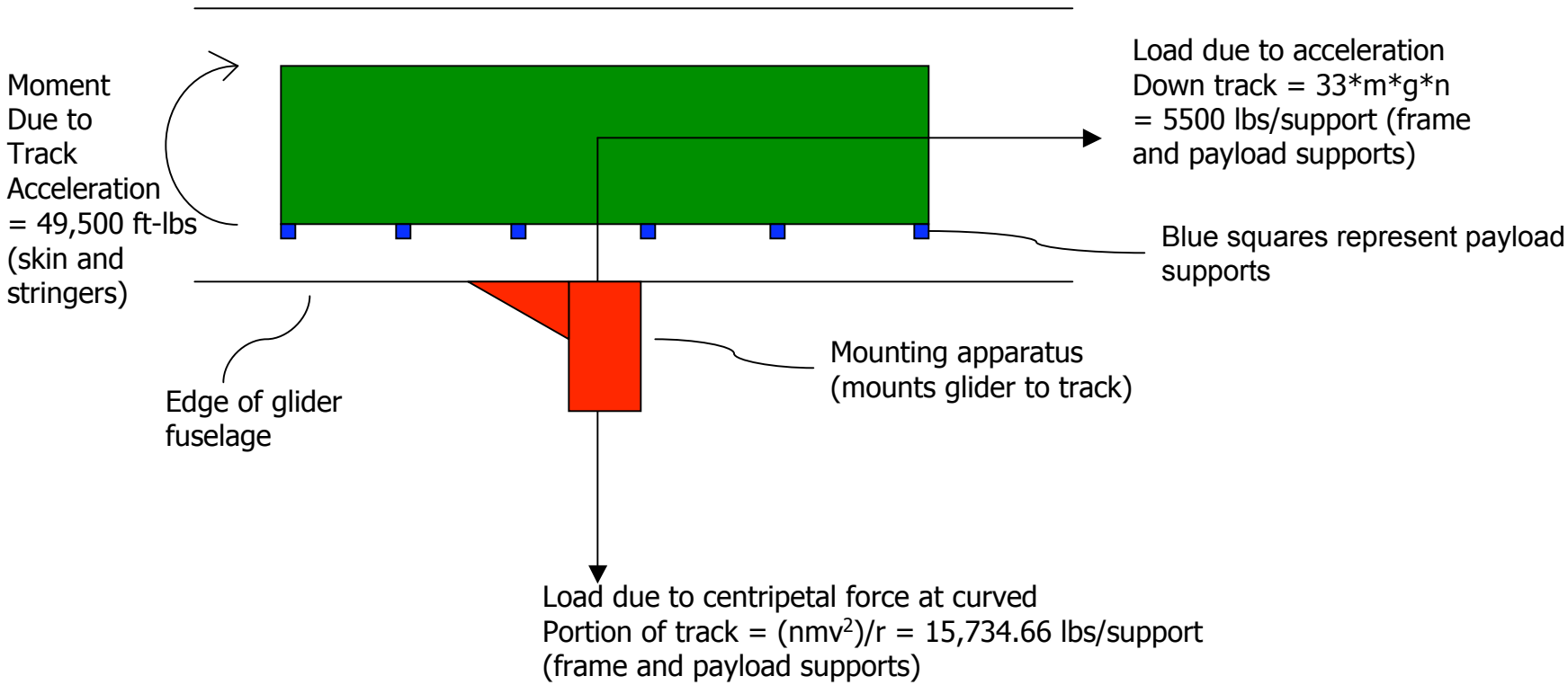

Structural Design (Fuselage)

Component	Payload Supports	Frame	Stringers	Skin
Function	Connect payload to frame	Support load due to payload at T.O.	Carry longitudinal stress in fuselage	Carry shear stress in fuselage
Material	Carbon Fiber	Carbon Fiber	Carbon Fiber	Skin Composite
Cross Section		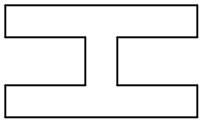	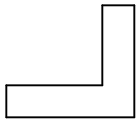	Thin Panel
Loads	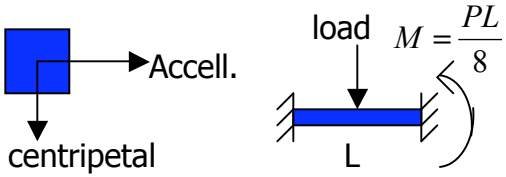	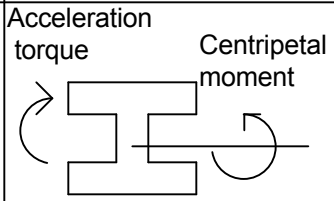	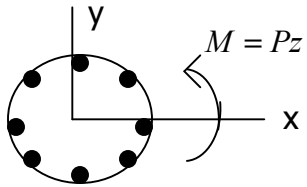	Shear flow In each panel (increases at X-axis)
Analysis Method	Beam analysis	Beam analysis	Stringer idealization	Panel shear flow
Constraints	$\sigma_i = \frac{M_i y_i}{I_i}$ $\sigma_{\max} = \sum \sigma_i \le \sigma_y$	$\sigma_i = \frac{My}{I} < \sigma_y$ $\tau = \frac{Tc}{J} < \tau_{all}$	$\sigma_i = \frac{n(F.O.S)My_i}{Ixx} < \sigma_y$	$\tau_{\max} = \frac{q_{\max}}{t} < \tau_{all}$

Major Loads Due to Lift

This elliptical lift results in a large Moment that acts at the root of the Wing. Our solution is to create a Fuselage that gives extra support To counteract this moment

$$P_y(z) = (2W/\pi L)\sqrt{1-(z/L)^2}$$

Assume loading is elliptical

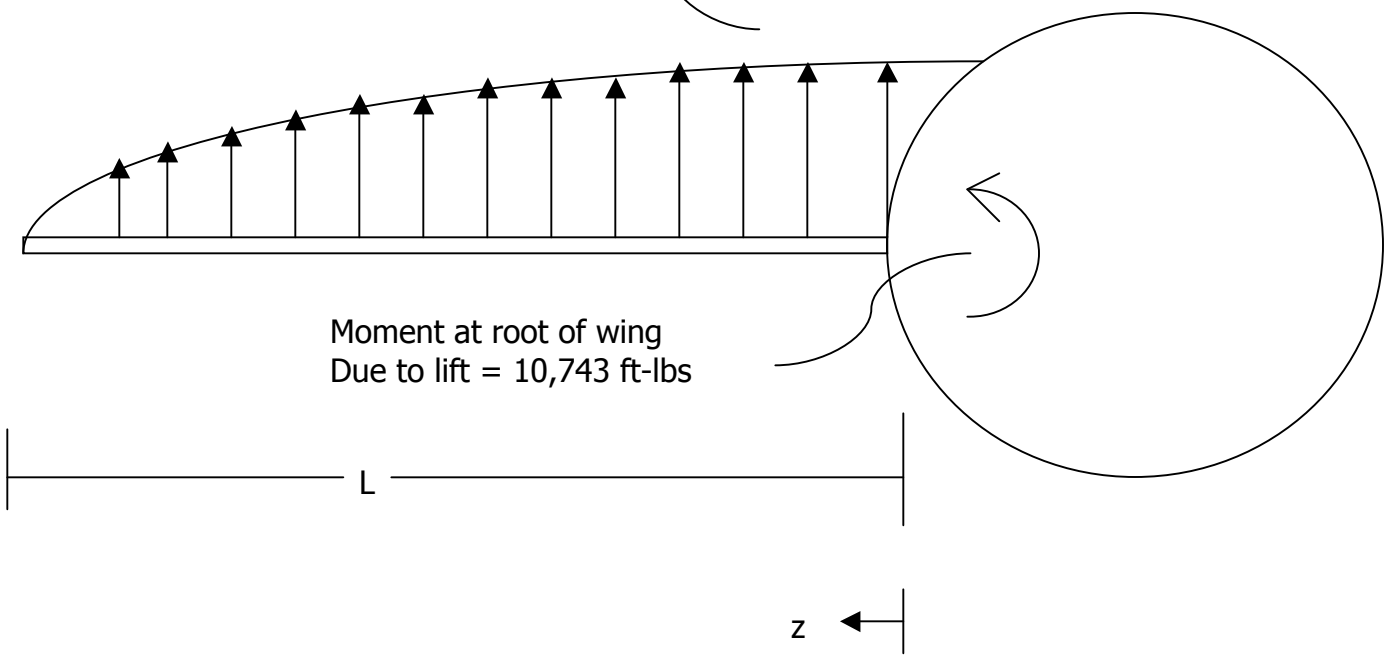

Solution to Wing Problem

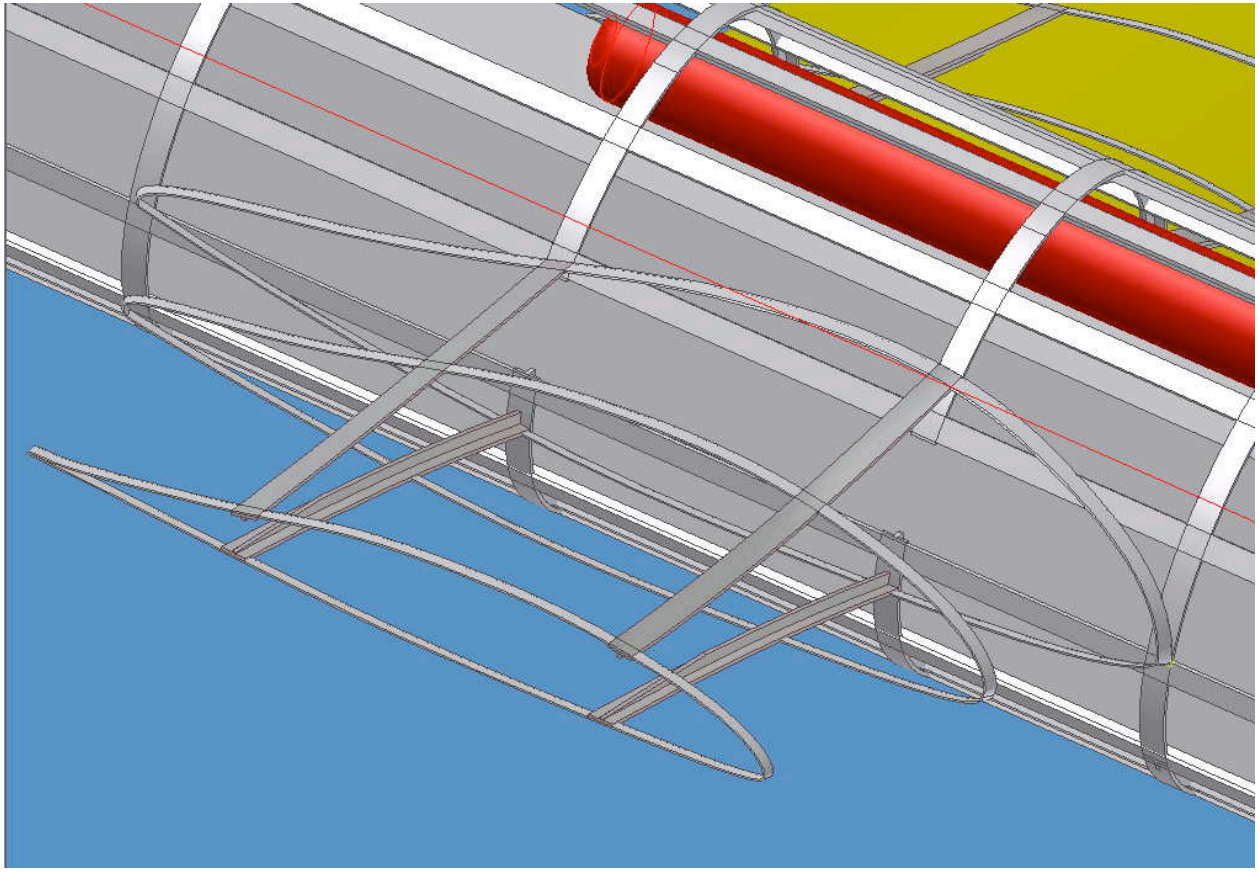

Optimized Structural Dimensions

Frame:

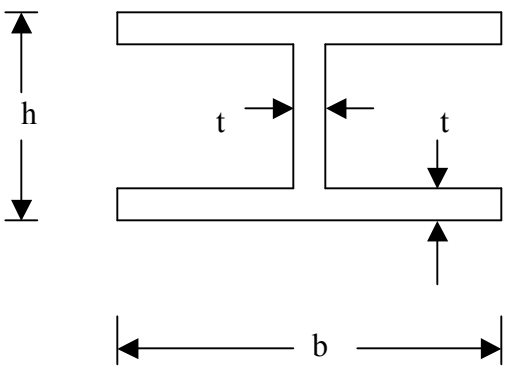

t = 0.1 in
b = 1.42 in
h = 4.0 in

Weight per Frame = 25.83 lbs

Estimated total structural Weight (no skin)=193.62 lbs

Payload supports:

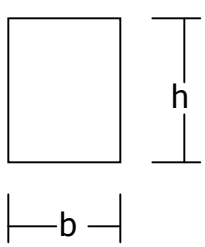

b = 1.04 in
h = 2.98 in

Weight per support = 3.12 lbs

Stringers:

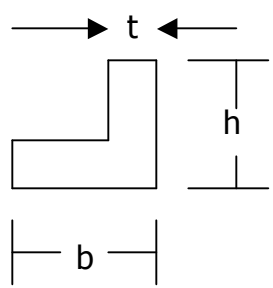

t = 0.1 in
b = 1 in
h = 0.5 in

Weight per Stringer = 1.66 lbs

Optimal skin thickness is 0.005 in → 0.02 in

Inflatable Structures

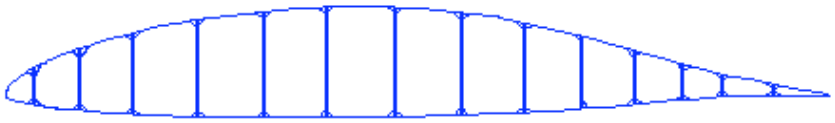

- Percentage of cross sectional area that is inflated is low. Loss of structures.
- Non-webbed indiv. spars have different load reactions.
- Added weight and prevention of spars from filling up outer skin where ribs are located.

- Outer skin will bubble up and disturb laminar flow.
- "Accordion" effect when inflated, losing desired airfoil shape.
- No inner tangential skin supports to smooth surface, or inner webbing to reduce torsion.

Combined Cross-Sectional Design

- From "Big Blue": Inflated Glider Developed by KU.
- Entirely Inflated: better structural stability.
- Several internal webbed connections to maximize rigidity without exceeding maximum deflated area and weight.
- Outer skin wrap: layer of Dacron to fill in gaps caused by "bubbles." W=7.4 lbs/wing
- Inner fabric: TBD from internal pressure and aerodynamic loads.

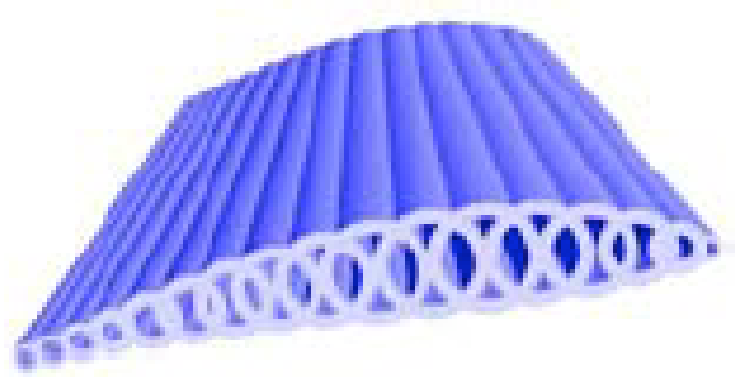

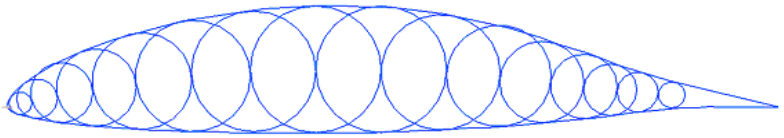

Lift Profile Based on Pressure Coefficients Along Chord

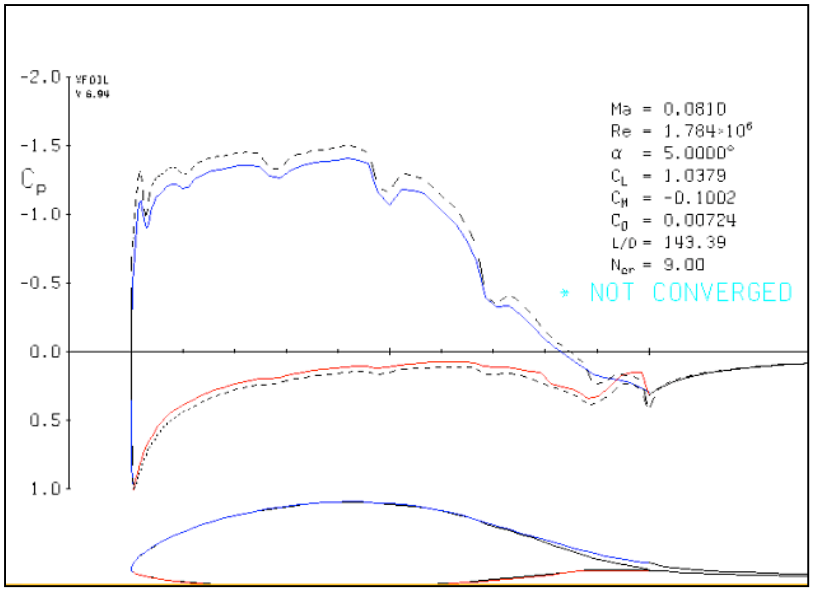

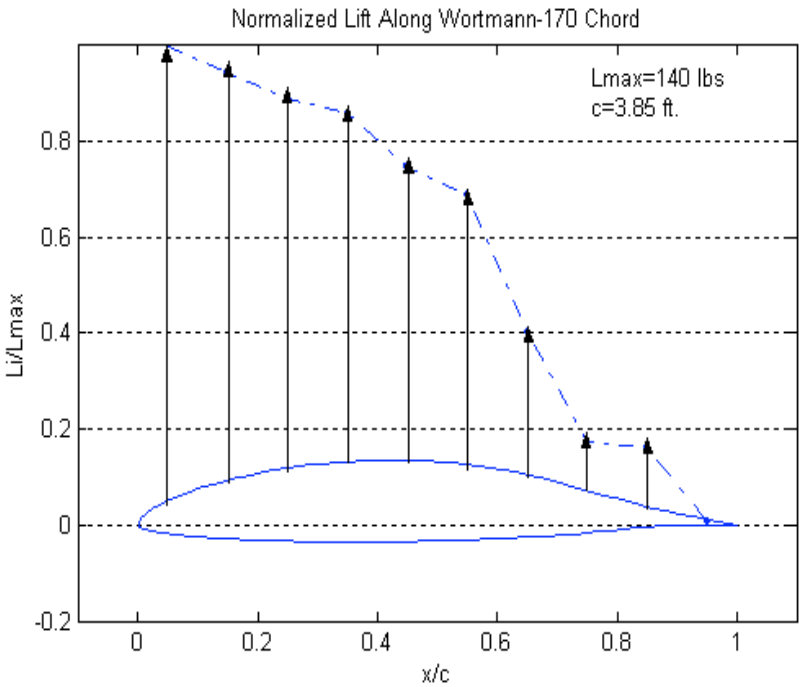

Wrinkling Pressure P_w

- Known as the minimum pressure required inside the inflated wing to keep both the upper and lower surface in tension, minimizing deflection.
- For an inflated cylinder:

  $P_w = 2M_w/\pi r^3$ (Webber)

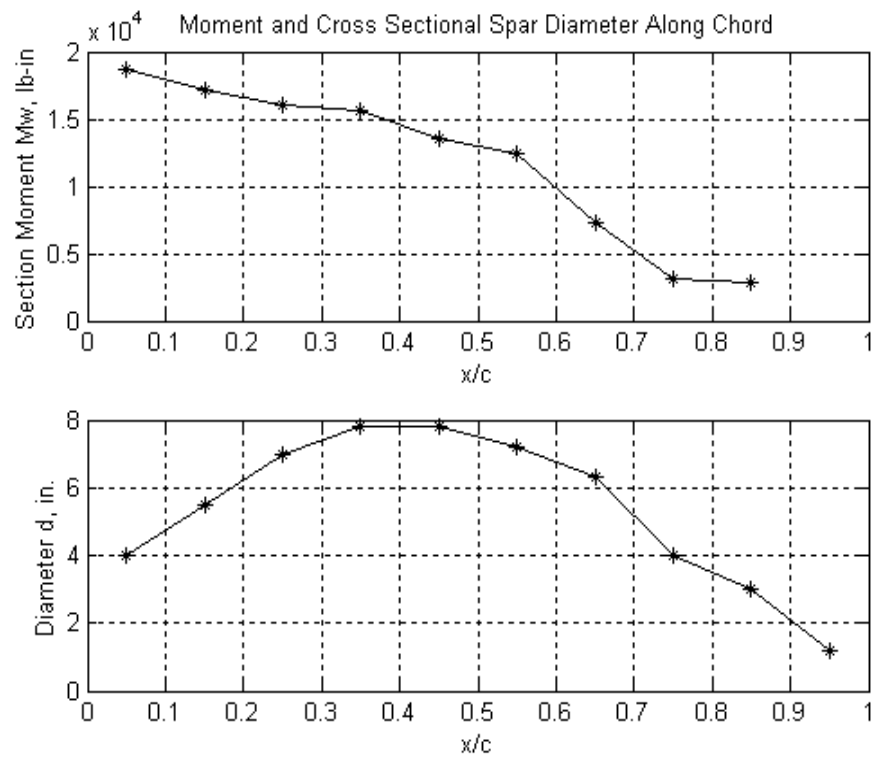

Pressure to Prevent Wrinkling

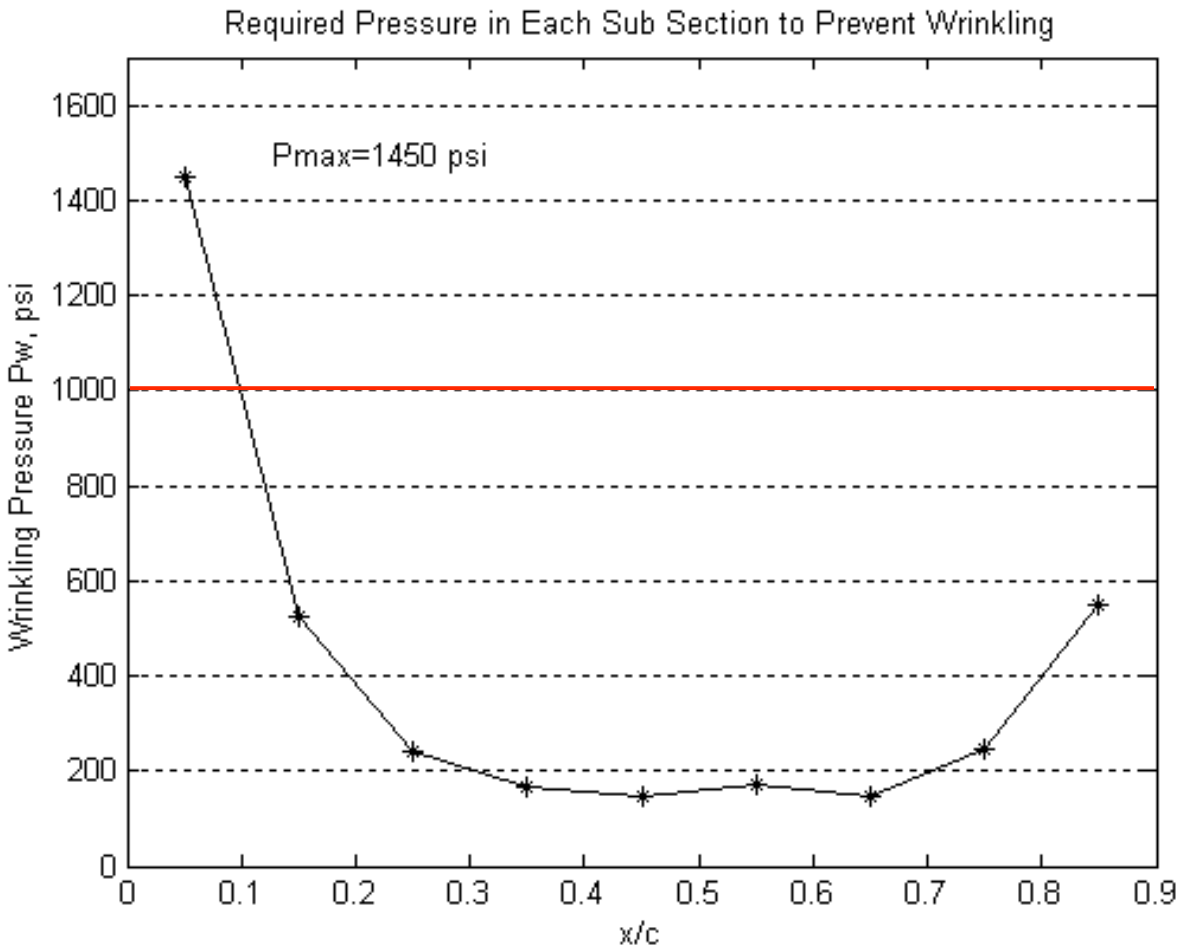

P_w = 1000 psi

Material Selection

- Burst Pressure $P_b=2tS/d$
  (must be $>P_w$)
- Vectron: used in Mars Pathfinder. Strong enough but too heavy. (~840 lbs/wing)
- Vela Carb 335U: carbon fiber fabric used to strengthen masonry structures.
- If double wrapped, $P_b=1760$ psi and

  W=87 lbs/wing.

Wing Deployment

Chosen Inflation Method

- Primary Inflation
  - Use chemical reactions to produce enough nitrogen gas to satisfy pressure requirements
  - Pressure required to be at a minimum of 1,000 PSI
  - Wing deployment is required to have a rapid, smooth deployment
- Reserve Inflation
  - Keep wings inflated at required pressure during entire glide phase
  - Use direct inflation method

Primary Inflation Method

- Process uses car airbag technology described in reactions below
- Benefits include fast deployment times and easy storage
- Problems arise using sodium azide, a harmful chemical which increases cost and safety concerns during manufacturing
- Sodium azide is highly volatile
- Small electrical charge is required to begin chemical reactions

$$2NaN_3 \Rightarrow 2Na + 3N_2$$

$$2Na + \frac{2}{5}KNO_3 \Rightarrow \frac{1}{5}K_2O + Na_2O + \frac{1}{5}N_2$$

$$K_2O + Na_2O + SiO_2 \Rightarrow alkaline\_silicate(glass)$$

Primary Inflation Analysis

- Deployment mixture is linearly related to pressure required
- Optimum amount of airbag mixture is found at 105 pounds
- Temperature affects required amount of airbag deployment mixture
- Temperature increase will cause pressure increase in wings

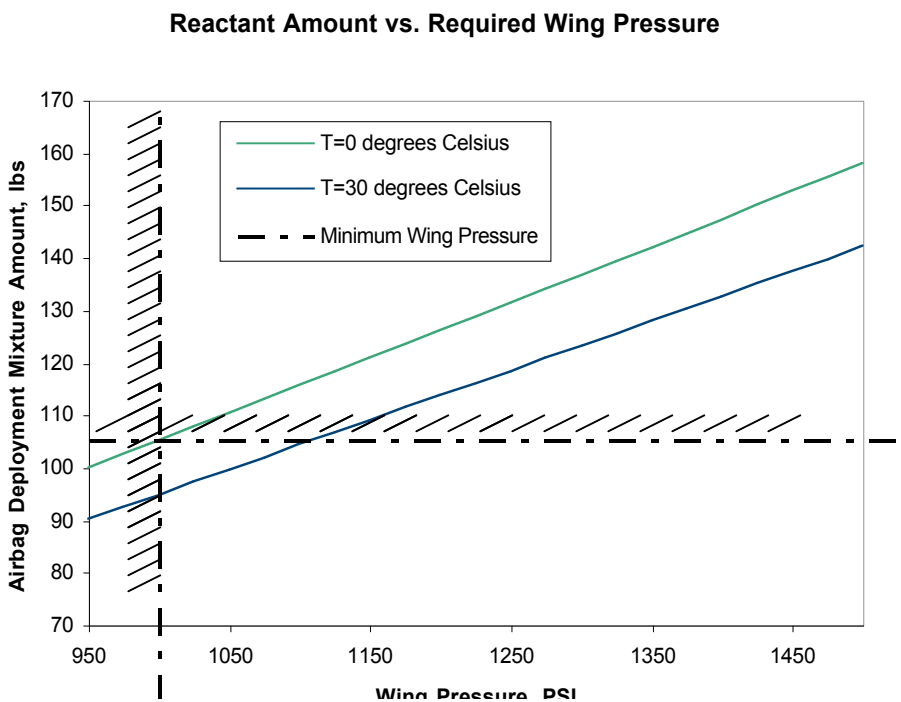

Primary Inflation Analysis

- Deployment time is based on the weigh size, and pressure
- By increasing pressure inflation times decrease
- Maximum inflation time is found out 0.022 seconds

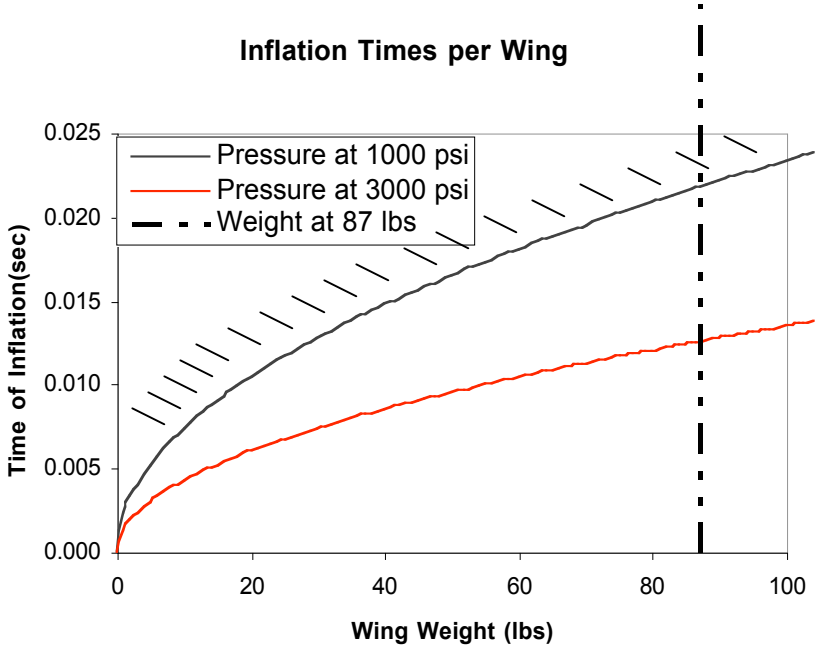

Reserve Inflation Method

- Can not use chemical reactions because they only allow for one time inflation
- Solution is to use nitrogen gas stored in tanks set above the payload
- Tanks are sized similar to commercial scuba gear
- Stored gas is controlled using a spring actuator

Reserve Inflation Analysis

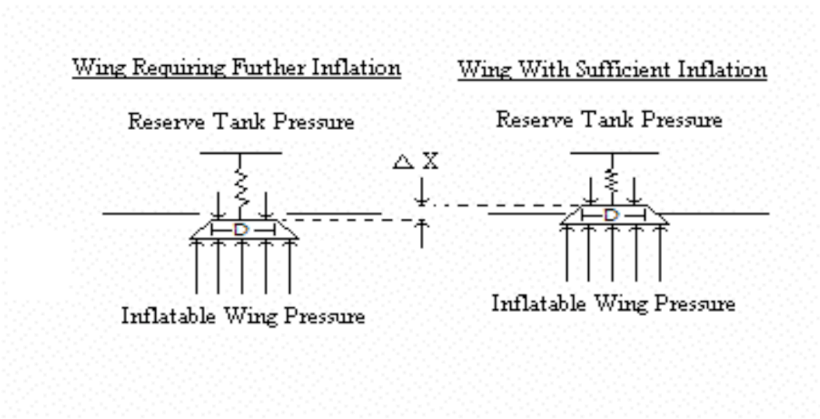

$$1-\frac{P_U}{P_S}=\frac{k\Delta x}{P_s\pi(D/2)^2}$$

- Actuator sensitivity is compared in the above equation.
  - P_U = under inflated pressure
  - P_S = stable inflation pressure
  - K, _x =actuator sensitivities
  - D = actuator size

Reserve Inflation Analysis

- With the given spring constant sensitive control of wing pressure is obtained
- Pressure is added to the inflated structures at pressure losses at 1% of required pressure
- Reserve inflation will compensate for leaks long enough to last for glide phase

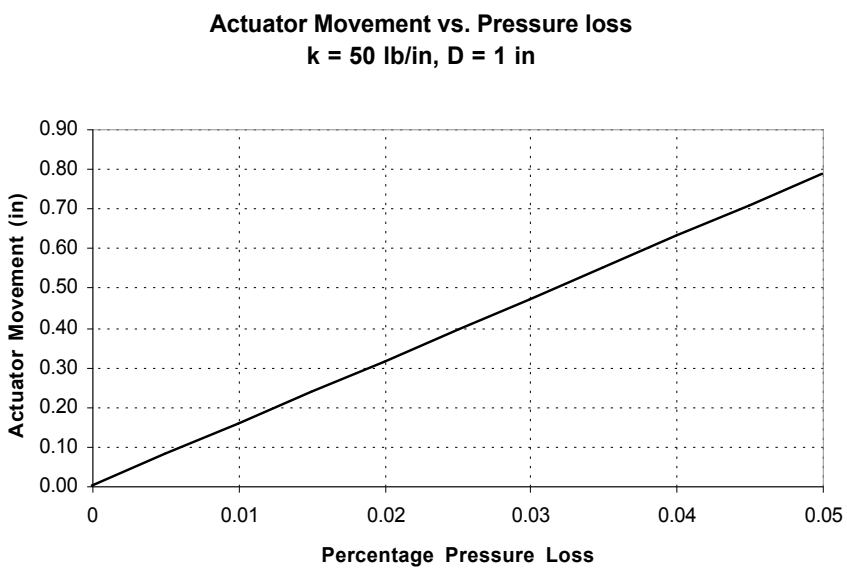

Additional Thoughts

- Chemical Reaction requires physical experimentation to refine chemical reactions
- Reserve inflation system requires testing for various inflation problems
- It is also possible to use controlled reserve inflation/deflation to gain more controllability for rolling and yaw maneuvers

Weights & CG

Glider Weight Distribution

- **<u>STRUCTURES GROUP</u>:**

  *Tail:
  - *Horizontal*
  - *Vertical*

  *Body:
  - *Main Fuselage*
  - *Nose*
  - *Rear Fuselage*

  *Wing (Including Stub)

- **<u>EQUIPMENT GROUP:</u>**

  *Avionics package
  *Servo Motors
  *Wing Deployment Ignition System

- **<u>LOAD GROUP:</u>**

  *Cargo
  *Airbag fuel
  *Sodium Azide Tank
  *Nitrogen Tank

Weight Breakdown

Component (Count)	Individual		Combined	
	lbs	kg	lbs	kg
Main Fuselage:				
Stingers (12)	1.66	0.75	20	9
Frame Support (6)	26.83	12.16	155	70
Skin Material	3.68	1.67	4	2
Rear Fuselage:				
Stringers (12)	2.41	1.09	29	13
Frame Support (2)	1.28	0.58	3	1
Skin Material	---	---	4	2
Tail Assembly:				
Vertical	26	11.79	26	12
Horizontal (2)	22.19	10.06	88	40
Wing Stub:				
Stub Frame support (6)	2	1	4	2
Stub Lateral Support (8)	4.95	2.24	10	5
Stub Skin Material	3.81	1.72	8	4
Wing (2)	87	39	174	79
Nose Cone	---	---	2	0.907
Sodium Azide Tank	---	---	50	23
Nitrogen Tank	---	---	20	29
Servo Motors (3)	19	9	57	26
Avionics & Battery Pack	---	---	0.467	0.211
Payload	---	---	1000	454
Sodium Azide Fuel	---	---	105	48
TOTAL WEIGHT (with payload & fuel):			**1,759 *lbs***	***798 kg***
TOTAL WEIGHT (without payload & fuel):			***654 lbs***	***297 kg***

Weight Distribution *With* Payload & Fuel

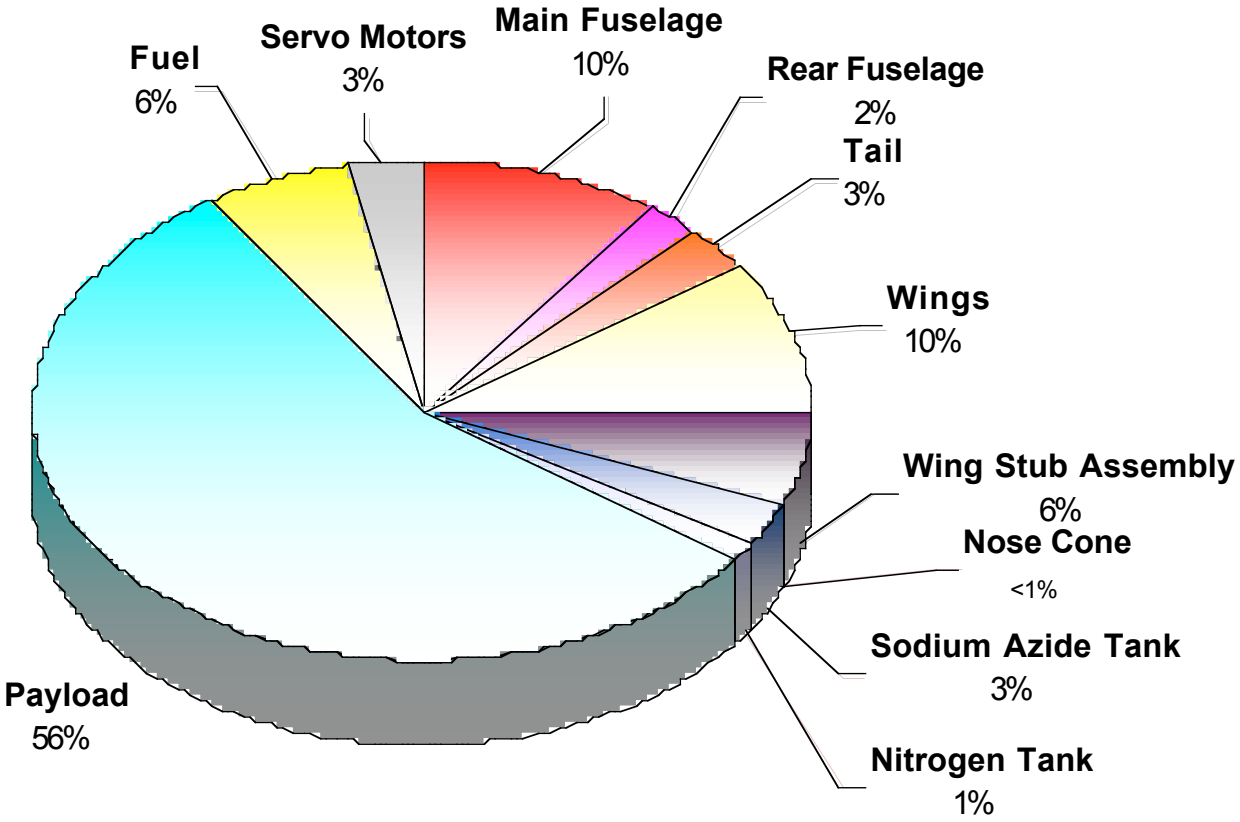

Weight Distribution *Without* Payload & Fuel

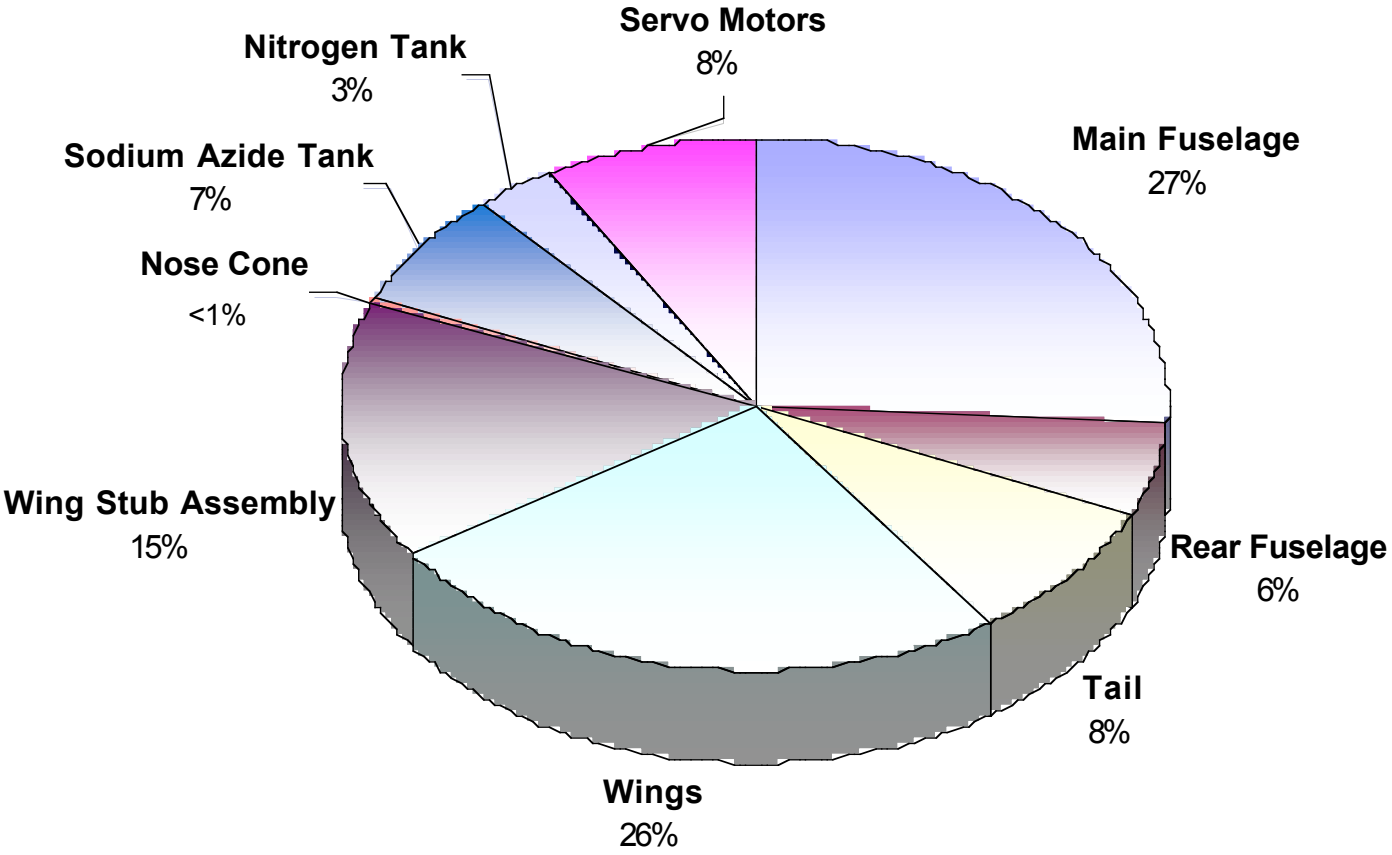

CG Location: Moment Analysis

Weight Component	Moment about the nose (lb*in)
Horizontal tail	17,736.9
Vertical tail	5,240.46
Wing	8,392.56
nitrogen tank	1,402.74
sodium azide tank & fuel	10,428.2
payload	81,013
motor 1	2,794.62
motor 2	2,882.6
main fuselage	15,538.8
rear fuselage	6,372
Total Moment	**151,802**

Final CG Location

- **With Payload and sodium azide fuel:**
  - CG ≈ 40 % C-bar (86 in from nose)

- **Without Payload and sodium azide fuel:**
  - CG ≈ 45 % C-bar (97 in from nose)

NOTE: The CG locations are taken in reference to the nose of the glider.

Stability and Control

Constraints

- Due to launch method
  - Height: 10 ft
  - Span: 10 ft
  - Length: 18.5 ft
- No control surfaces available on wings due to inflatable structure.

Requirements

- Withstand large launch loads.
- Stable and controllable during wing deployment.
- Stable and controllable during glide.
- Navigated without the aid of an onboard pilot.

Tail Selection

- Tail types considered
  - Conventional
  - T-Tail
  - V-Tail
  - Inverted V-Tail
  - Y-Tail

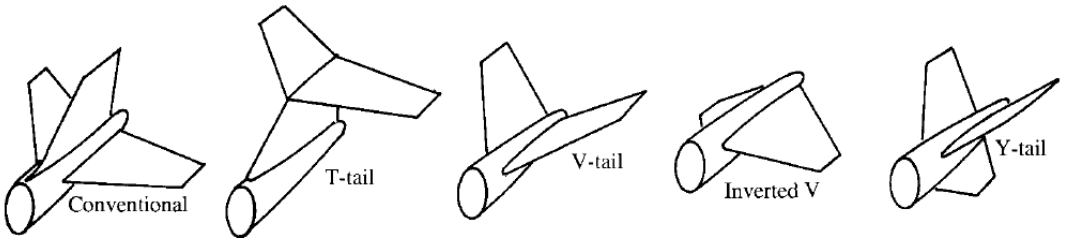

- The conventional tail was selected for its reliability and the ability to provide adequate stability and control at the lightest weight.

Tail configuration

- The tail contains very little sweep.
  - Due to low glide velocity.
  - To maximize tail volume.
- The horizontal and vertical tails are staggered.
  - The effectiveness of increased moment arm was greater in the horizontal tail and thus is mounted aft of vertical tail.
- Control surfaces.
  - Control surfaces are mounted on the trailing edges at half the length of the chord.

TAILS	Horizontal	Vertical
Airfoil	FX 67-K-170/17	FX 67-K-170/17
Span	10 ft	3.5 ft
Root Chord	3.00 ft	3.50 ft
Tip Chord	2.75 ft	2.50 ft
Sweep Angle	2.86 degrees	4.09 degrees

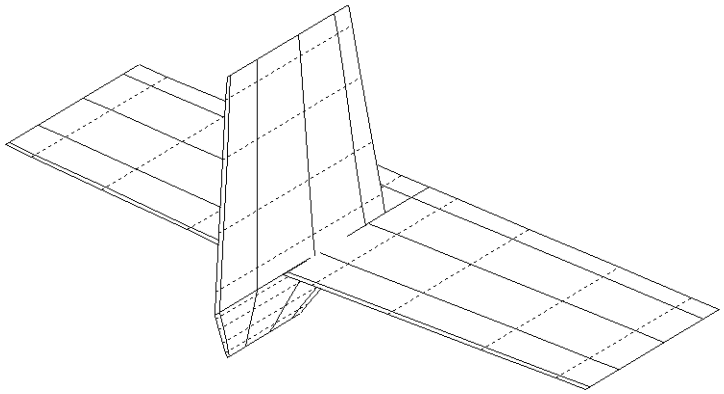

Tail modeled by Athena Vortex Lattice Code

CG and Static Margin

- The Neutral Point of glider is located at 39.2% of the overall length of glider.
- The desired Center of Gravity of glider is located at 33.5% of the overall length of glider.
- The CG location can be shifted forward and aft depending on payload and still maintain trim and a minimum L/D of 33.2.
- Maximum CG positions (percentage of glider length):
  - Forward: 32.5%
  - Aft: 34.1%

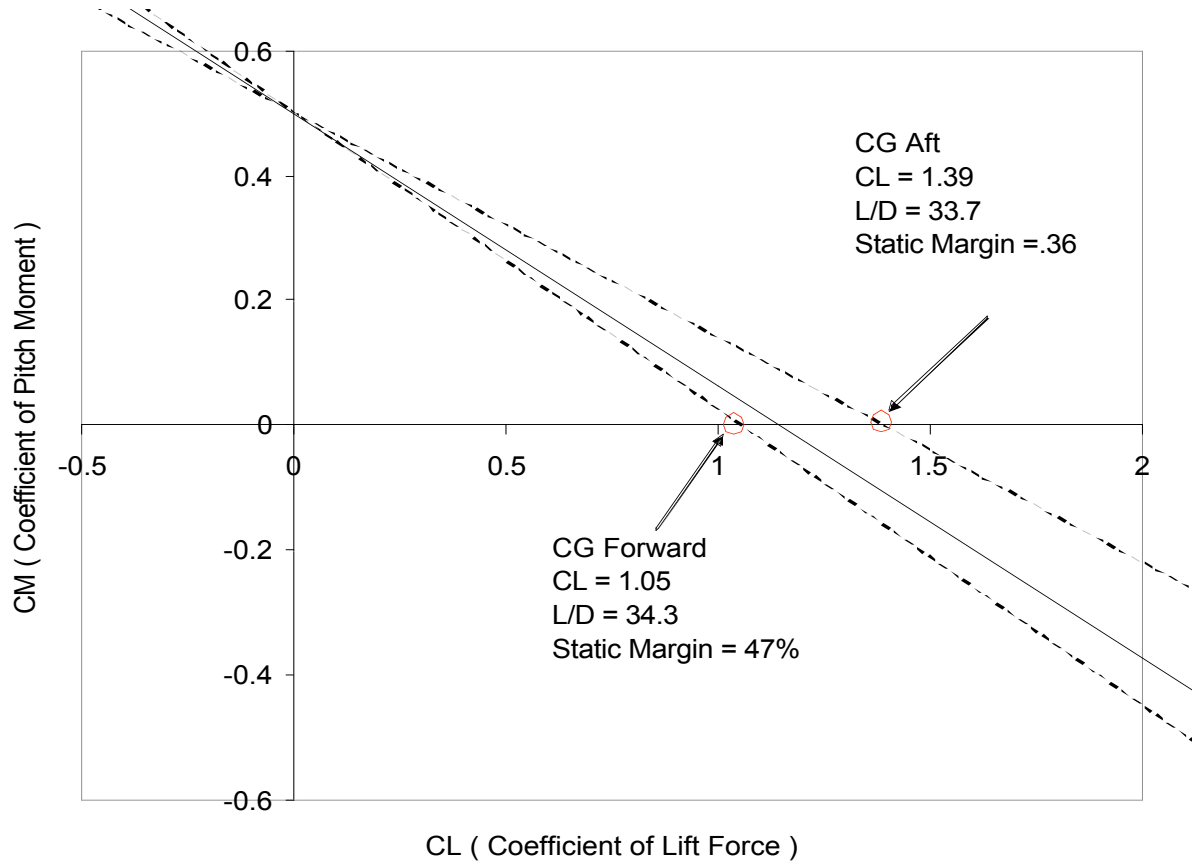

Longitudinal Trim

- Trim example:
  - At desired CG location
  - Can easily handle angles of attack from -5 to 5 degrees with elevator deflections of -5 to 3 degrees.
  - Constraint lines represent Coefficients of Lift that correspond to L/D values of 33.2

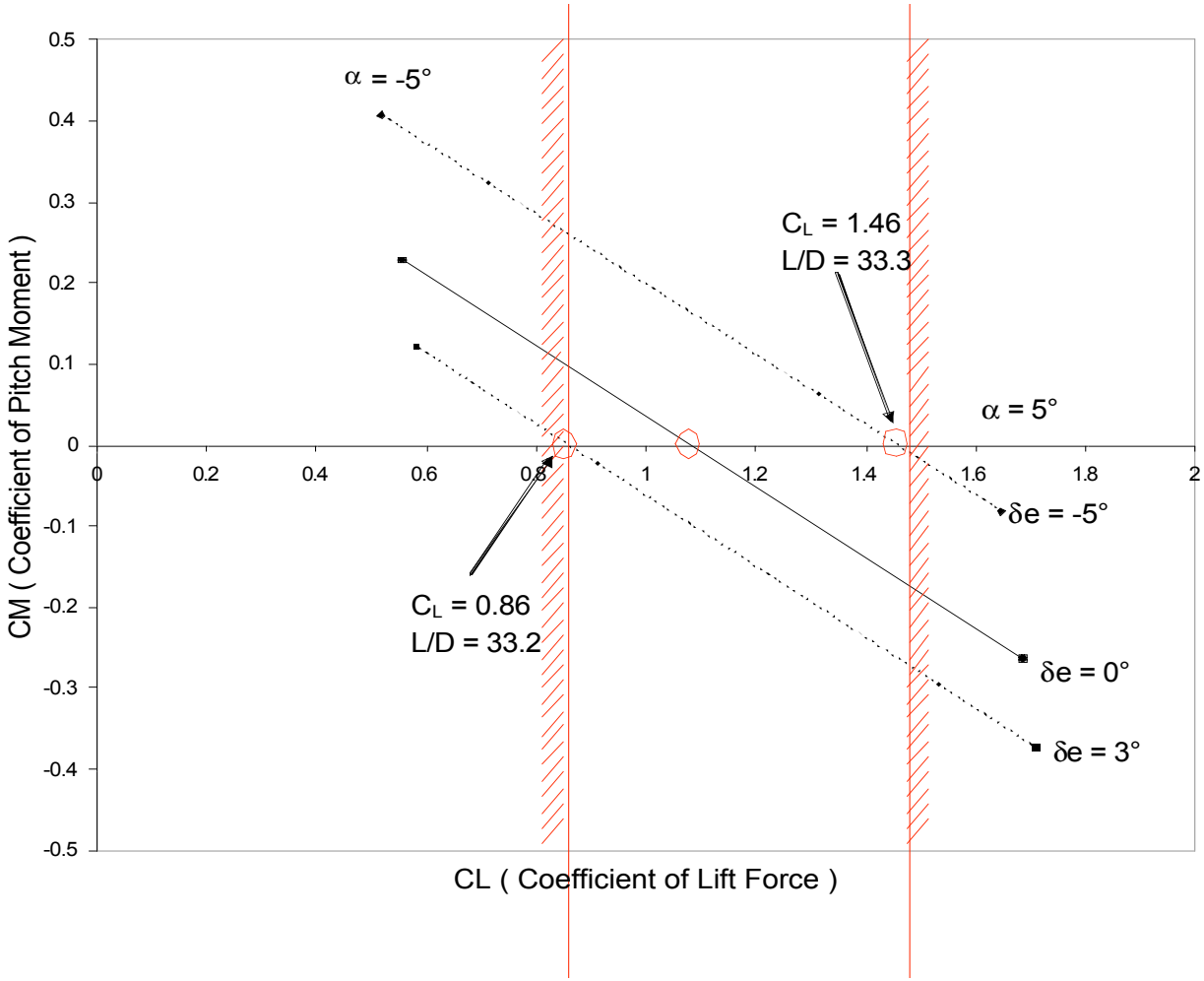

Yaw Control

$$C_{nB}\ B + C_{n\delta r}\ \delta r = 0$$

$$B = -\ (\ C_{n\delta r}\ \delta r\ )\ /\ C_{nB} \qquad \text{(Yaw angle)}$$

Maximum Yaw Angle induced is approximately ± 30 degrees

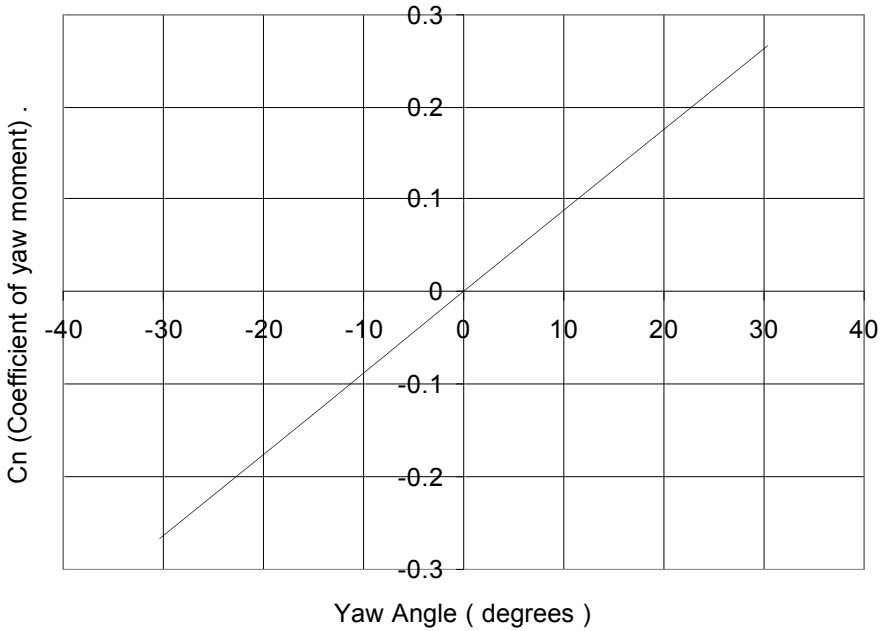

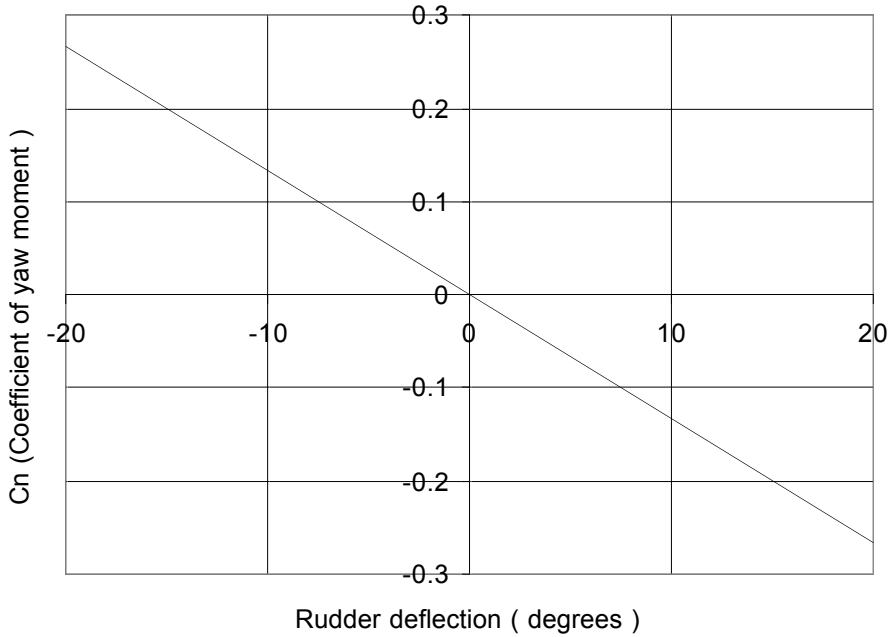

Roll effectiveness

$p = (-2\ V\ C_{lB}\ B) / (C_{lp}\ b)$ (Roll Rate)

$B = -\ (\ C_{n\delta r}\ \delta r\ )\ /\ C_{nB}$ (Yaw angle)

Maximum roll rate: of 0.1 radians/sec, or 5.85 degrees/sec

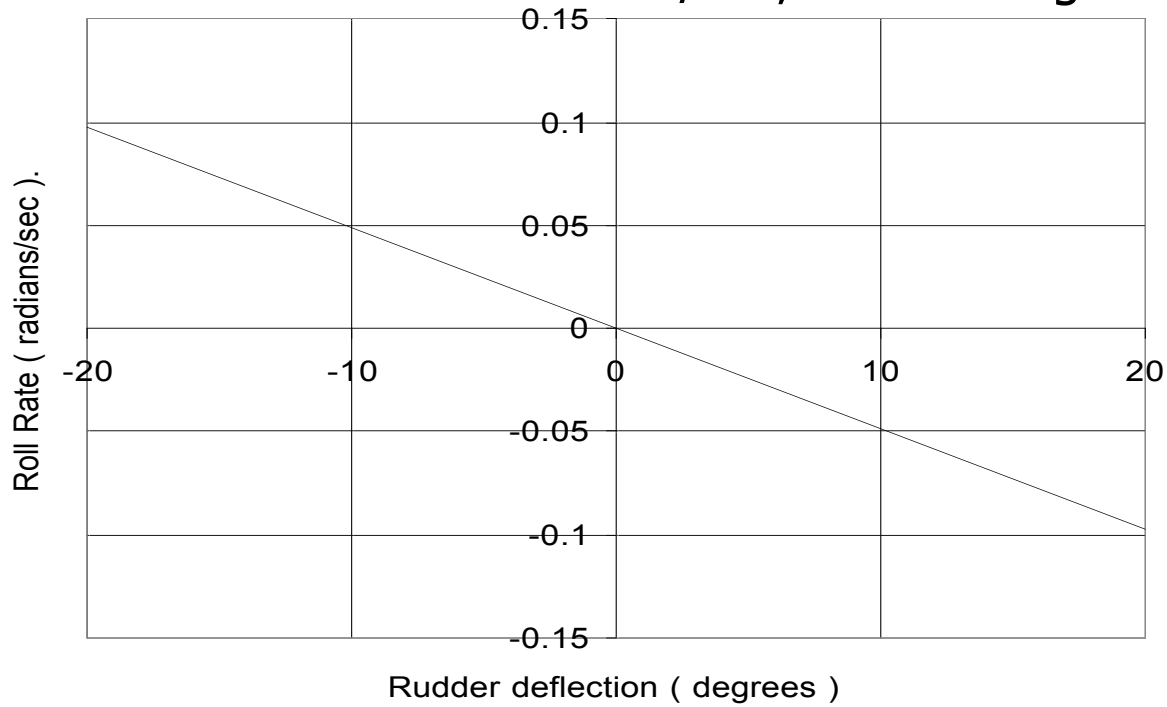

Avionics

Avionics Package

Piccolo Plus

By

Cloud Cap Technology

www.cloudcaptech.com

Key Features

- Flight planning system (FalconView)
- End-user Programmability
- Autonomous operation
- Integrated avionics systems, i.e.
  - Autopilot, flight sensors, navigation etc…
- Updated inertial and air data sensors

Key Components

- CPU - The brain of the Piccolo is the MPC555 microcontroller. It delivers 40Mhz of power and can handle a wide range of interfaces.
- Sensors
  - Air data sensors
  - Inertial – features 3 gyros and 3 accelerometers
- GPS - Motorola M12 provides basic ground speed and position
- Navigation - Uses the Motorola M12 GPS to command and control the autopilot

System Layout

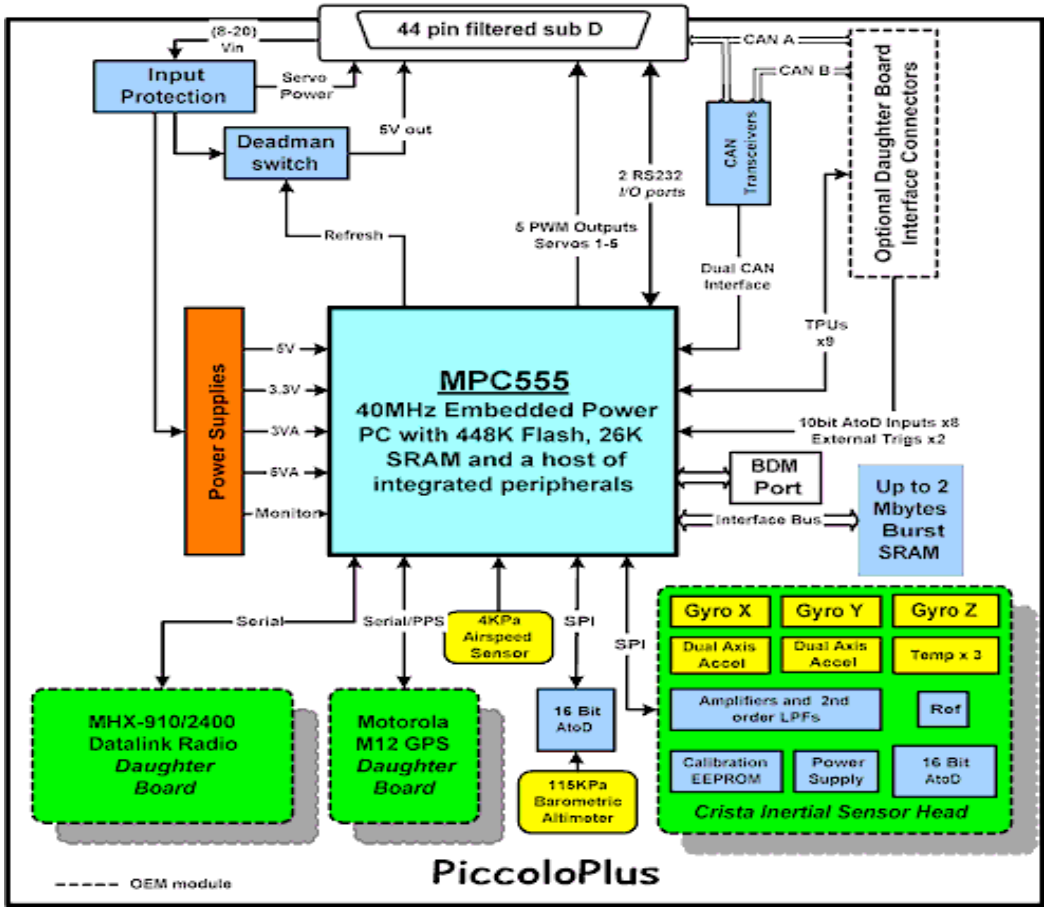

www.cloudcaptech.com

Communications

- Data Stream – Data transfer is done through a network of wireless channels
- Wireless Link – Provided by MHX 910/2400 frequency hopping radio (Microhard Systems Inc.)
- Flow Control – For support of multiple aircraft, also prevents multiple radio transmissions

Flight Planning…

- Flight plans are made with waypoints that are linked together, i.e. like vectors
  - 100 waypoints stored in avionics
- Each waypoint encodes latitude, longitude, altitude, etc…

Flight Planning page:

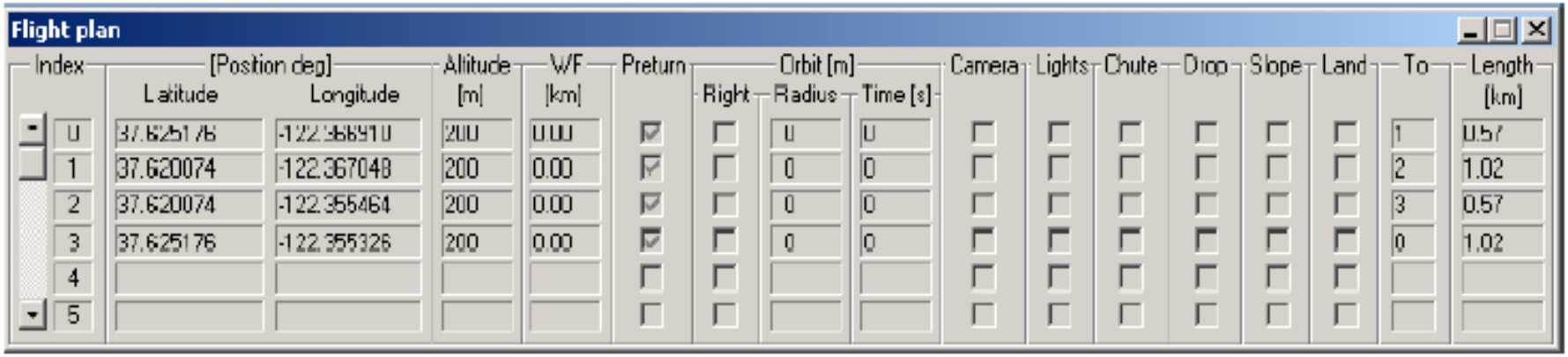

Flight plan

Index	[Postion deg] Latitude	Longitude	Altitude [m]	W/F [km]	Preturn	Orbit [m] Right	Radius	Time [s]	Camera	Lights	Chute	Drop	Slope	Land	To	Length [km]
0	37.625176	-122.366910	200	0.00	☑	☐	0	0	☐	☐	☐	☐	☐	☐	1	0.57
1	37.620074	-122.367048	200	0.00	☑	☐	0	0	☐	☐	☐	☐	☐	☐	2	1.02
2	37.620074	-122.355464	200	0.00	☑	☐	0	0	☐	☐	☐	☐	☐	☐	3	0.57
3	37.625176	-122.355326	200	0.00	☑	☐	0	0	☐	☐	☐	☐	☐	☐	0	1.02
4					☐	☐			☐	☐	☐	☐	☐	☐		
5					☐	☐			☐	☐	☐	☐	☐	☐		

More on flight planning…

- Autopilot Page:

  Displays the current autopilot command status
- Can easily be changed from one command to another

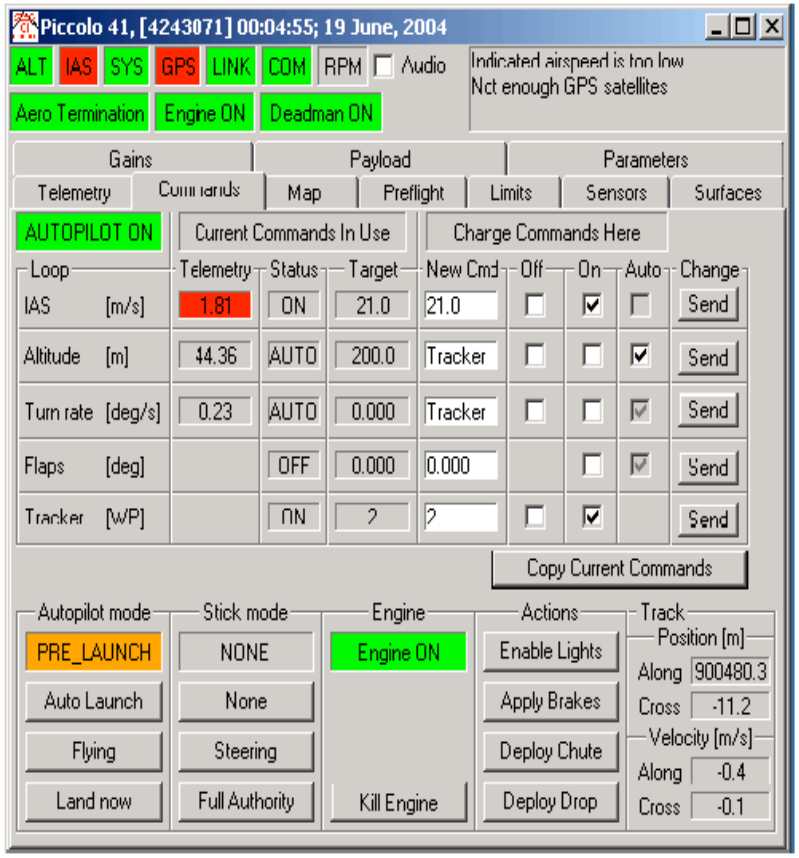

Example flight plan

- Map Page:

  Provides interface for flight planning
- Gives up-to-date vehicle location
- Displays vector shape plans

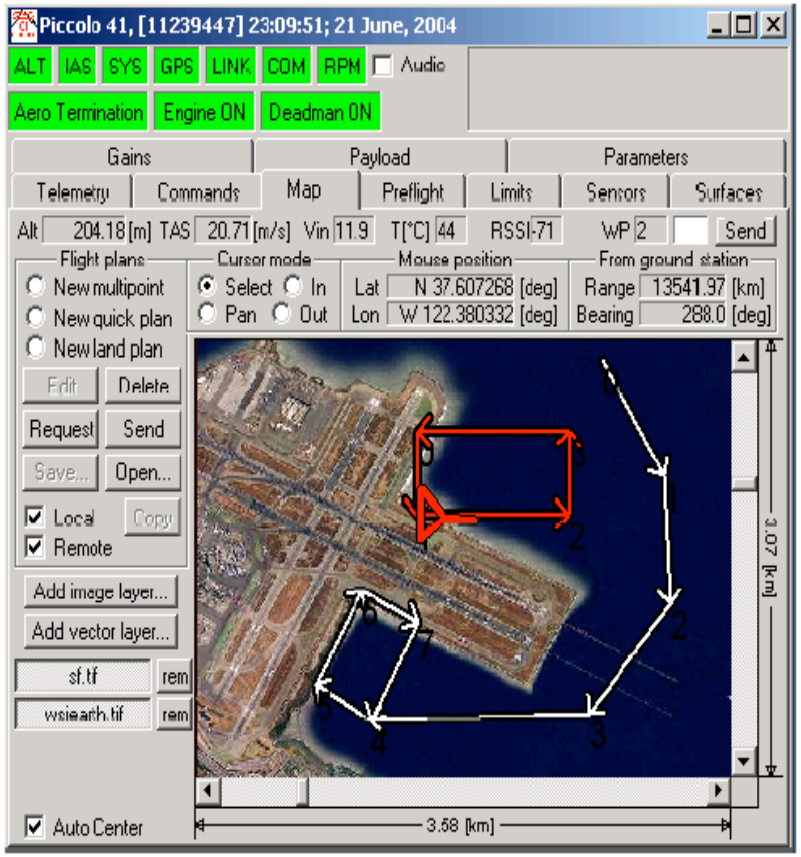

Avionics Overview

- Direct and control unmanned glider aircraft to deliver a 1,000 lbs payload 50 miles off the sea base.
- Ignite Sodium Azide fuel for wing deployment

Onboard Ship Glider Storage

Glider Storage

- 233 gliders per storage room
  - 2000 square feet by 8 feet high
- Only 206 fit by volume
- Actual configuration will fit less

<u>Assumptions</u>

- Square Storage Rooms
- No damage dealt sustained by stacked components

Component Stacks

3 Separate Components

•4 layers of fuselages

Layers 1 and 3 have 35 gliders

Layers 2 and 4 have 30 gliders

Place to right

•6 cones in a stack

17 stacks in a column

Stacks stand on end

Placed to left

• Tails will be stored in middle of room

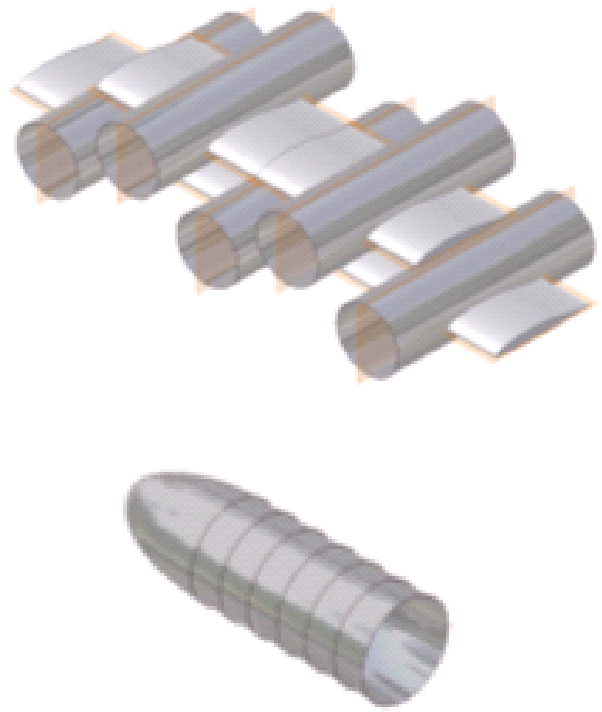

Final Configuration

- Each glider is broken down into 3 components
- 130 gliders will fit in each storage room
- 64 % of volume occupied

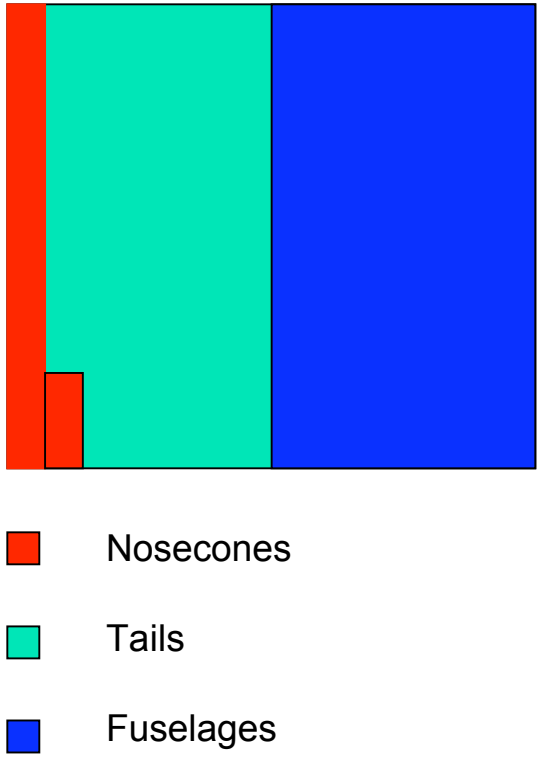

Cost Analysis

Total Cost Estimates

Structures: Fuselage (110 lbs. Al Alloy and Carbon Fiber)	$2,500
Avionics Package	$6,197
Airbag System	$5,500
Inflatable Wings: Material	$8,383
Control Motors	$6,042
Total (per glider)	**$28,622**
One time cost (Avionics Ground Station)	$7,566

Cost Comparison to Existing Payload Delivery Methods

Delivery Method	Cost per Unit	Max Payload (lb)	Cost/Pound Deliverable
Glider	$28,622	1000	$42.67
C-130 Hercules	$44.1 million	42,000	$7.43
Chinook Heavy Lift Helicopter	$26.1 million	3,038	$48.67

Conclusions

- We have provided a design for a disposable glider that will deliver supplies to troops in hostile territories.
- The glider satisfies all of the following RFP constraints.
  - Payload = 1000 lbs.
  - Range = 50 miles
  - Launch Speed = 500 knots
  - Launch Acceleration = 30g
  - Launch Pod Dimensions = 10 ft span