Slipstream Aerospace

SWAT

Executive Summary

The RFP calls for designing a one-class commercial airliner that can carry a passenger load of 175 passengers. Additionally the aircraft must be able to takeoff under 8200 feet at any airport as well as having a maximum lift to drag ratio 125% of the Boeing 737-800 series. The maximum cruise altitude is to be 41,000 feet and the cruise Mach number is to be 0.8 with a maximum Mach number of 0.83. The target production date is set to 2020, which allows for currently in development technologies to be utilized by the designers; in relation to that the aircraft must be capable of utilizing biofuels as an alternative to Jet-A.

Slipstream Aerospace's response was the SWAT design, the initial hypothesis was to design an aircraft with an increased span to provide the needed lift to drag ratio increase, select a supercritical airfoil specifically designed to operate in the transonic region. Use a strut to brace the wing to allow for a reduced wing weight by thinning the wings. Select an appropriately powerful engine that also allows for the use of biofuels.

The SWAT design, a Strut-braced Wing And T-tail, it utilizes a high wing and T-tail to prevent turbulent flow from passing over the wings and interfering with the horizontal tail and elevator at low angles of attack. To prevent the high wing second trim point from ever being encountered an angle of attack limiter is utilized. The strut allows for a reduction in weight which leads to improved fuel efficiency. The wing sweep was reduced to promote laminar flow and reduce drag. The wings were extended to a wing span of 140 feet to allow for the required improvement in the lift to drag ratio. The NASA SC(2)-0610 was chosen for the main wing and horizontal tail airfoils due to its performance in the transonic region as well as Korn equation results.

Team Members:

Jorge Arias

Douglas Ebner

Ivan Fernandez

Andy Hsu

Teddy Mbwadzawo

David Pfister

Kevin Wulff

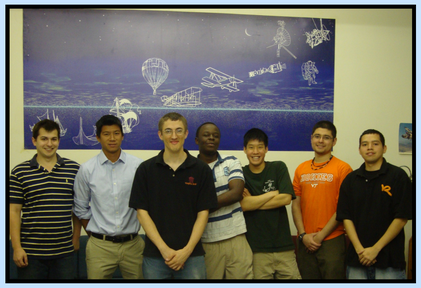

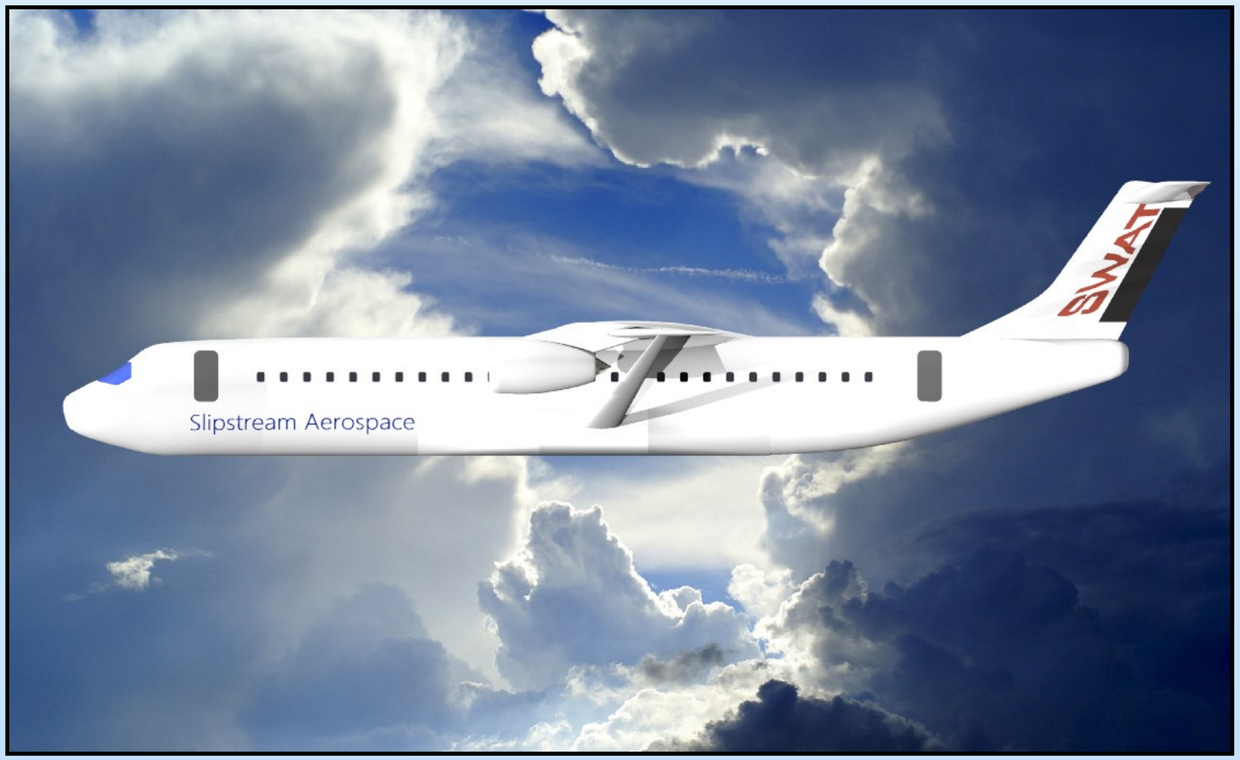

Characteristic	SWAT
Total Thrust (lb_f)	52600
Planform Area (ft^2)	1454.91
Wing Span (ft)	140
Sweep (deg.)	12
TOGW (lb)	174590
Cl_{max}	2.93
V_{stall} (mph)	133.28
$V_{takeoff}$ (mph)	146.61
Cl_{max} TO	2.19
W/S	120
T/W	0.301
Takeoff Parameter	181.87
Takeoff Distance (ft)	7300

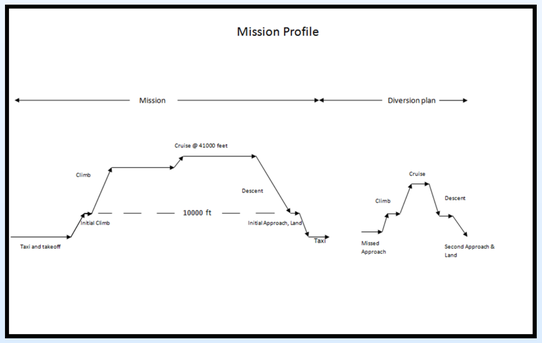

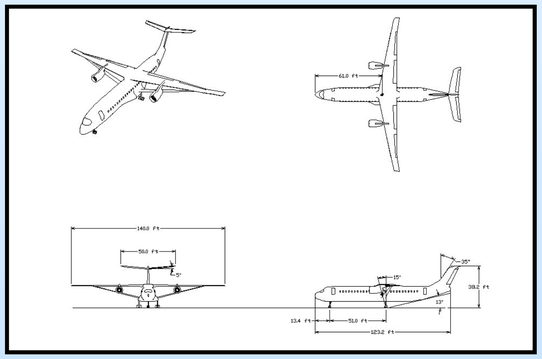

Three view of SWAT design

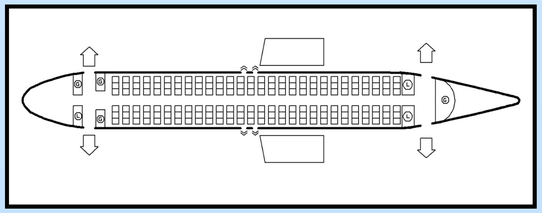

Cabin layout of a single class 175 passengers